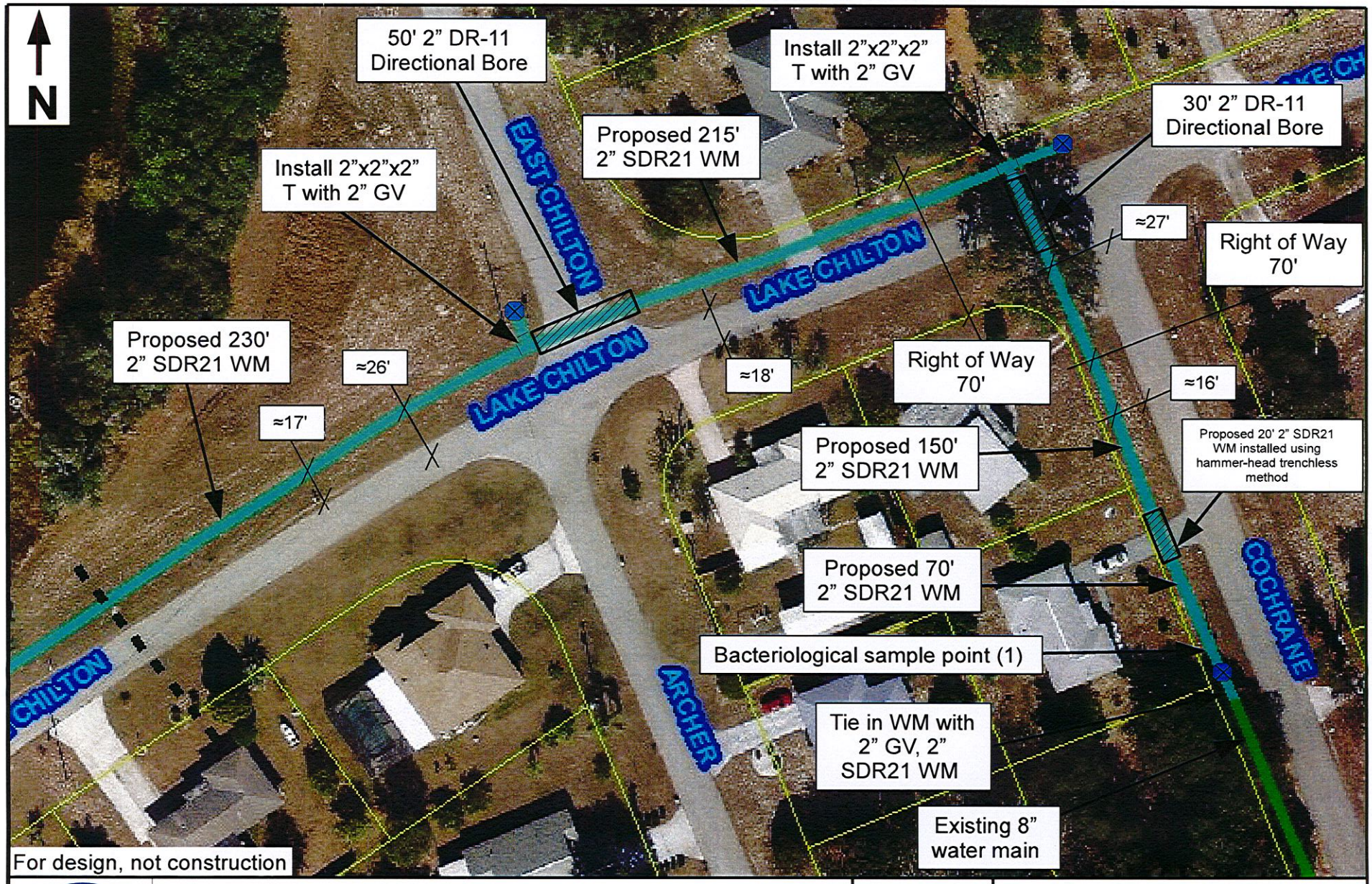

CITY OF AVON PARK FOUNDED 1886	Lake Chilton Water Main	JULIAN DELEON	Page 1 of 9
	The City of Avon Park Utilities Department - 110 East Main Street	PE-67319	
	Josh Turner- Utilities Supervisor drawn by Taylor Smith	City Manager	January 13, 2016

CITY OF AVON PARK FOUNDED 1886	Lake Chilton Water Main	JULIAN DELEON	Page 2 of 9
	The City of Avon Park Utilities Department - 110 East Main Street	PE-67319	
	Josh Turner- Utilities Supervisor drawn by Taylor Smith	City Manager	January 13, 2016

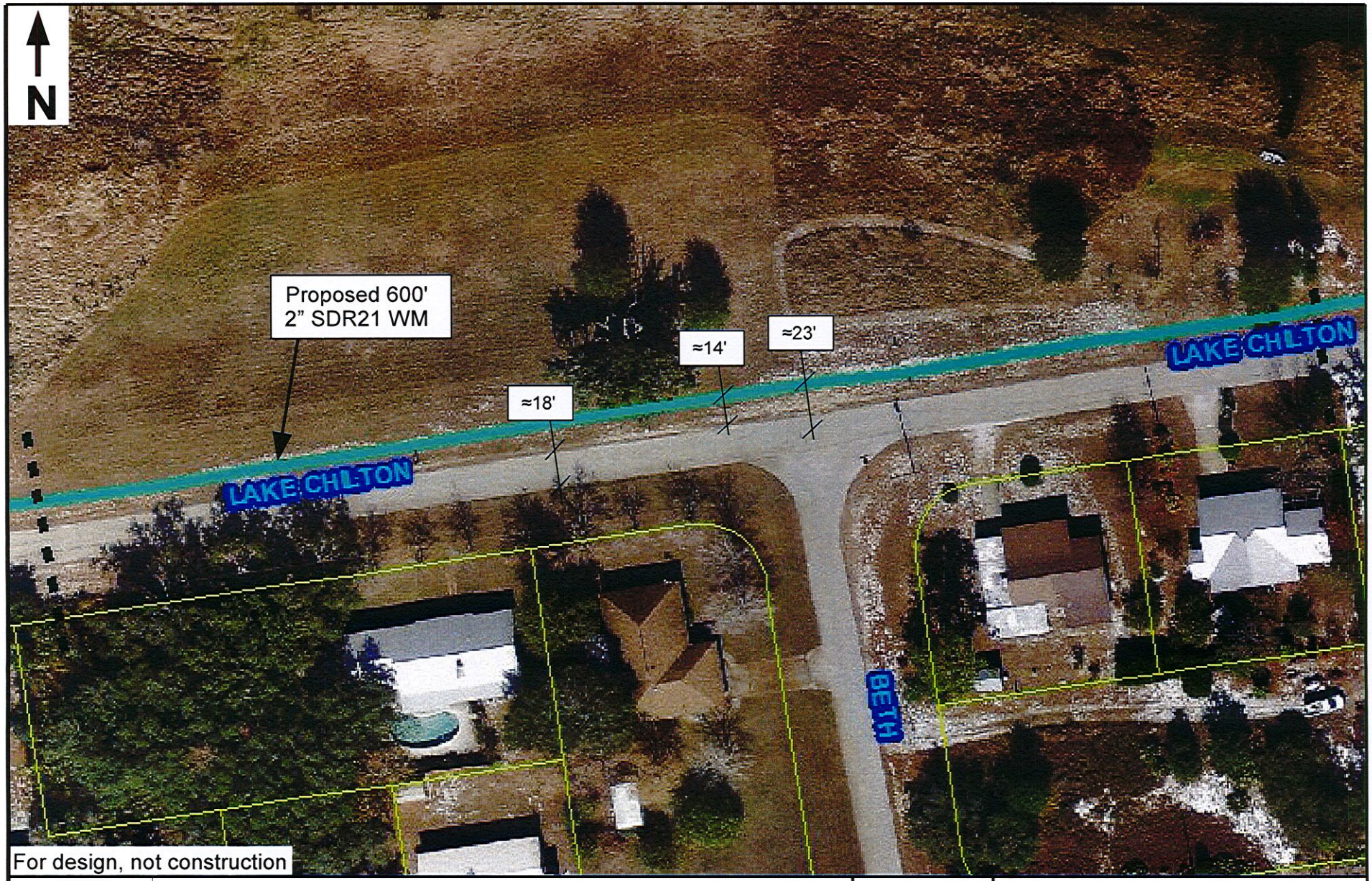

CITY OF AVON PARK FOUNDED 1886	Lake Chilton Water Main	JULIAN DELEON	Page 3 of 9
	The City of Avon Park Utilities Department - 110 East Main Street	PE-67319	
	Josh Turner- Utilities Supervisor drawn by Taylor Smith	City Manager	January 13, 2016

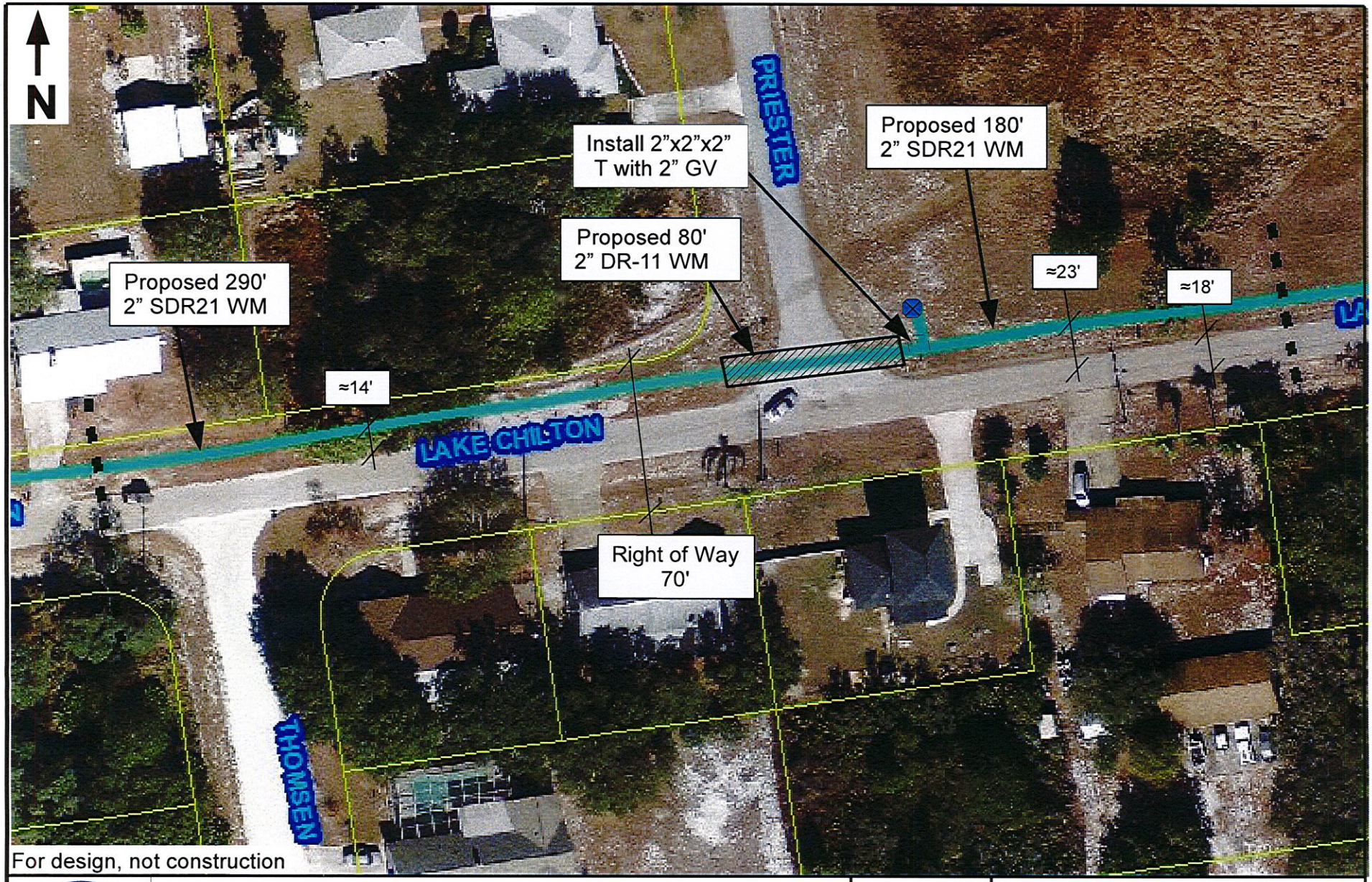

For design, not construction

Lake Chilton Water Main	JULIAN DELEON	Page 4 of 9
The City of Avon Park Utilities Department - 110 East Main Street	PE-67319	
Josh Turner- Utilities Supervisor drawn by Taylor Smith	City Manager	January 13, 2016

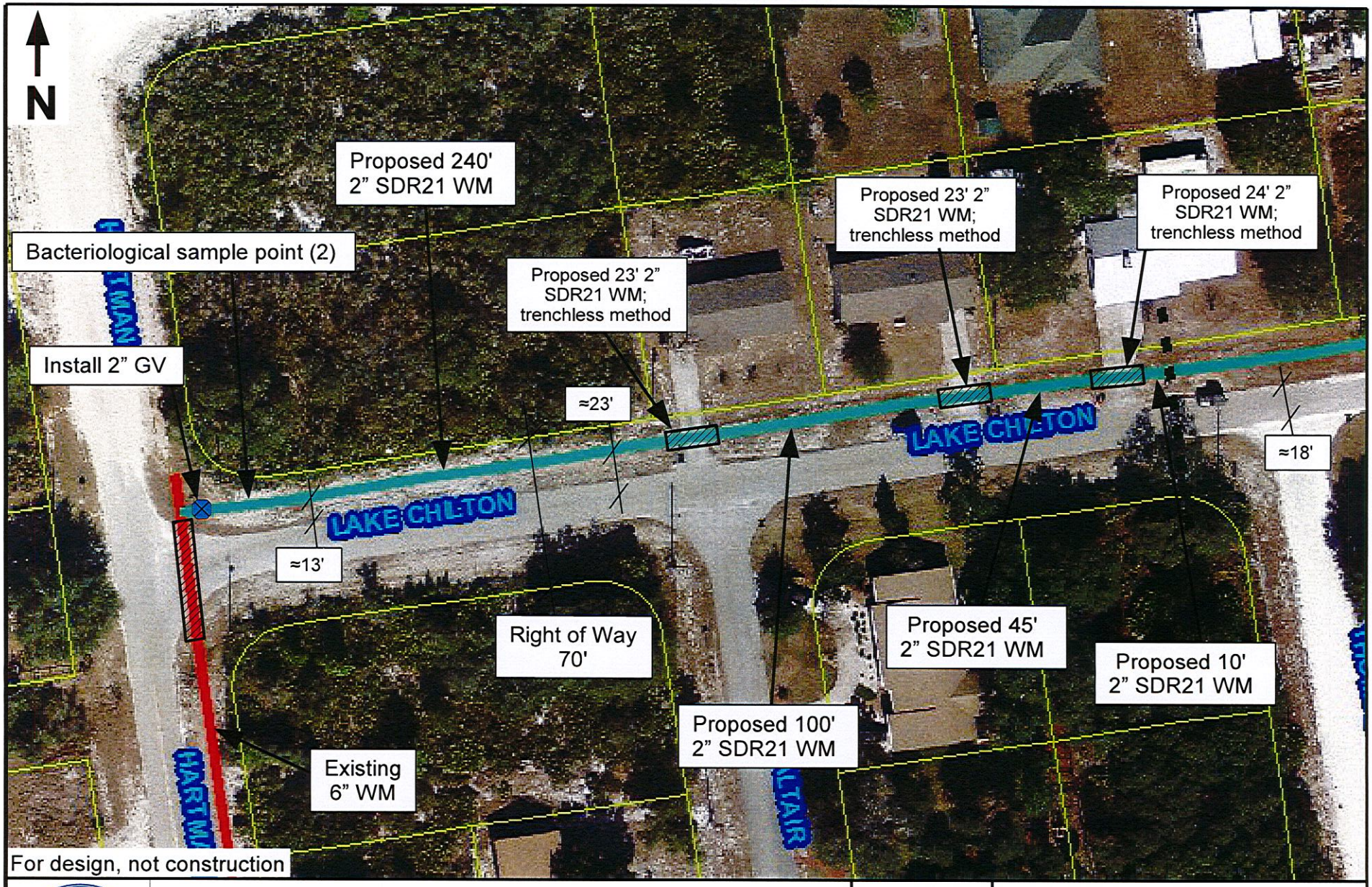

CITY OF AVON PARK FOUNDED 1886	Lake Chilton Water Main	JULIAN DELEON	Page 5 of 9
	The City of Avon Park Utilities Department - 110 East Main Street	PE-67319	
	Josh Turner- Utilities Supervisor drawn by Taylor Smith	City Manager	January 12, 2016

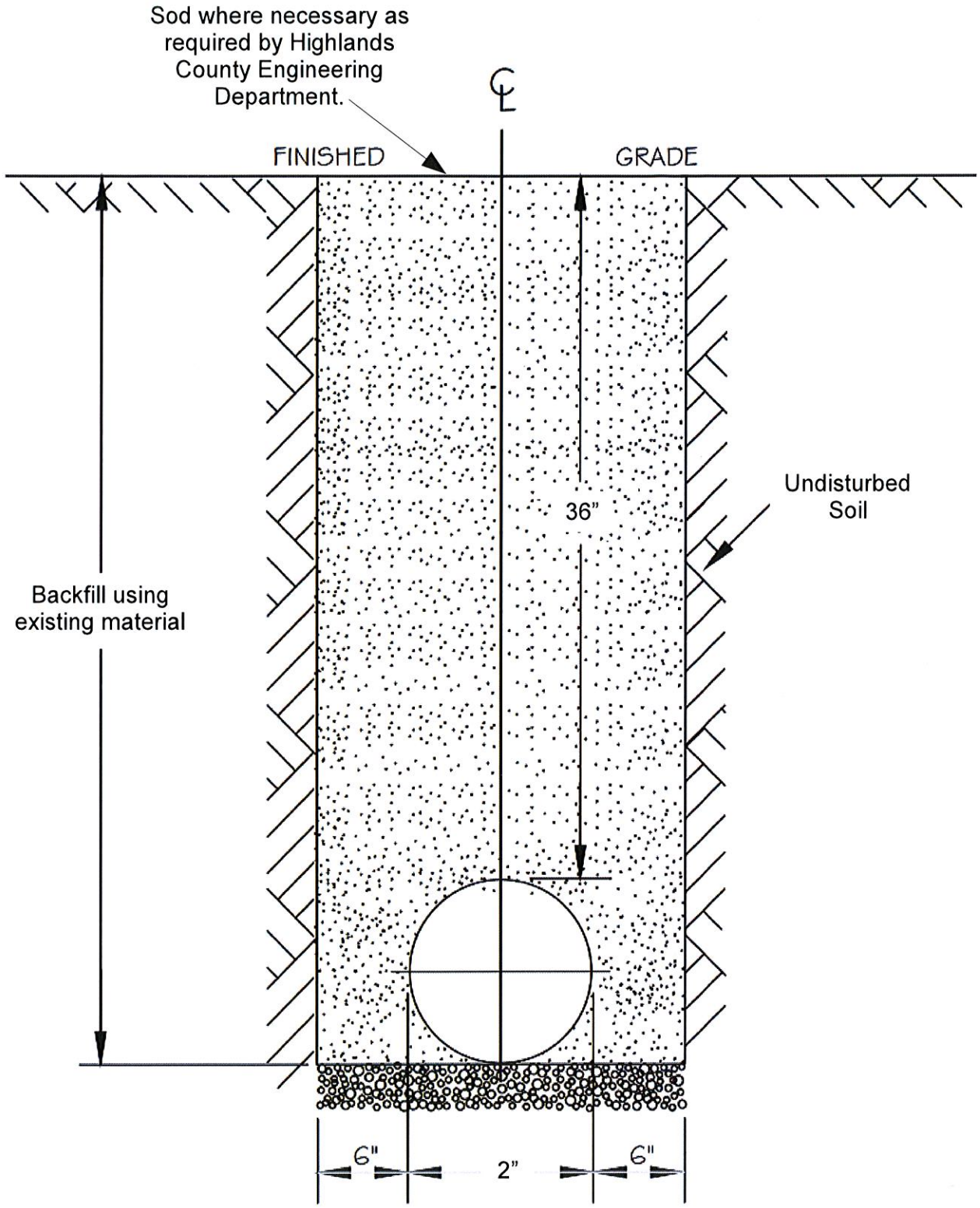

CITY OF AVON PARK FOUNDED 1886	Trench Detail	JULIAN DELEON	Page 6 of 9
	The City of Avon Park Utilities Department 110 East Main Street	PE-67319	January 13, 2016
	Josh Turner- Utilities Supervisor drawn by Taylor Smith	City Manager	

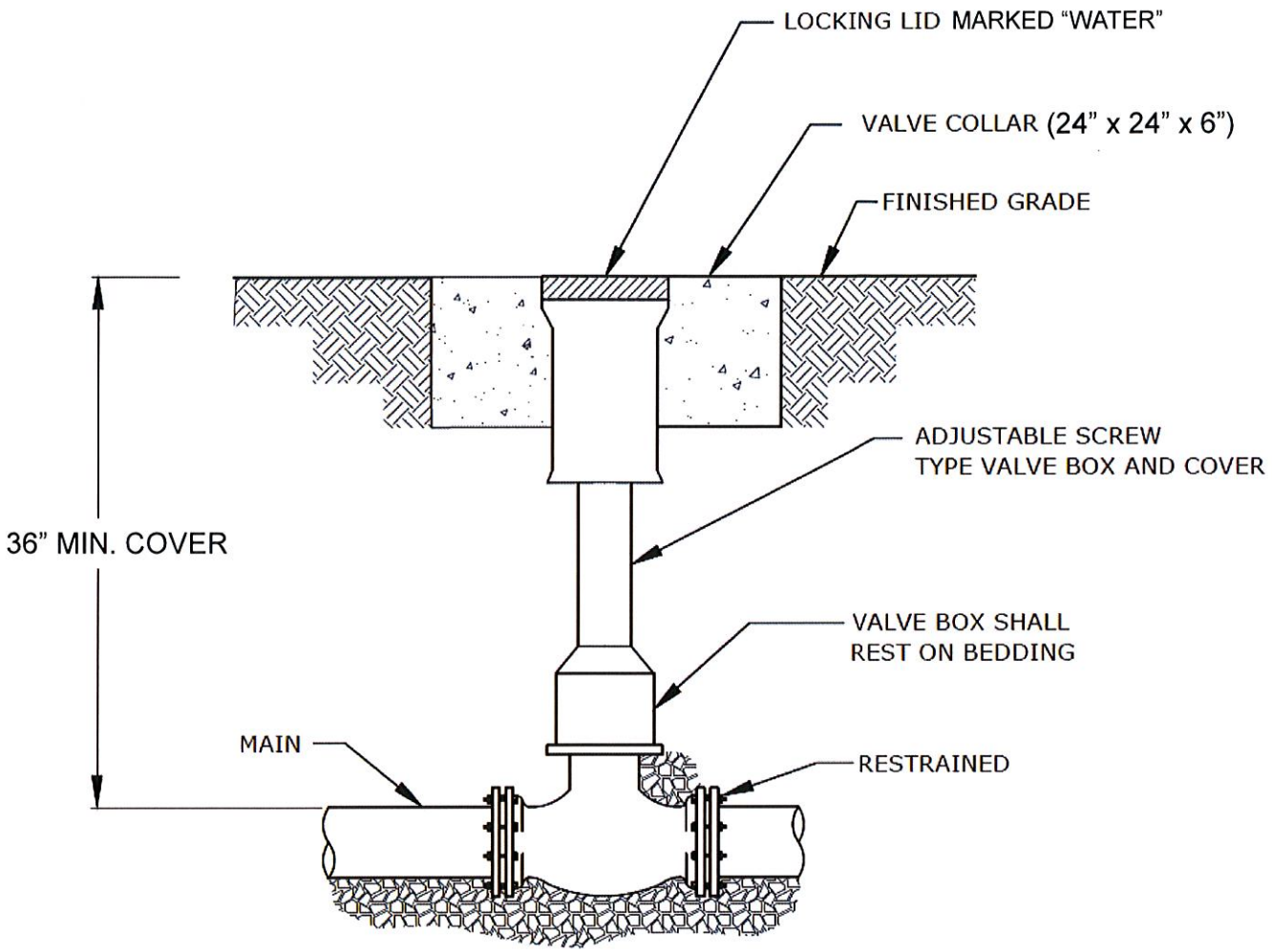

	Gate Valve Detail	JULIAN DELEON	Page 7 of 9
	The City of Avon Park Utilities Department 110 East Main Street	PE-67319	
	Josh Turner- Utilities Supervisor drawn by Taylor Smith	City Manager	January 13, 2016

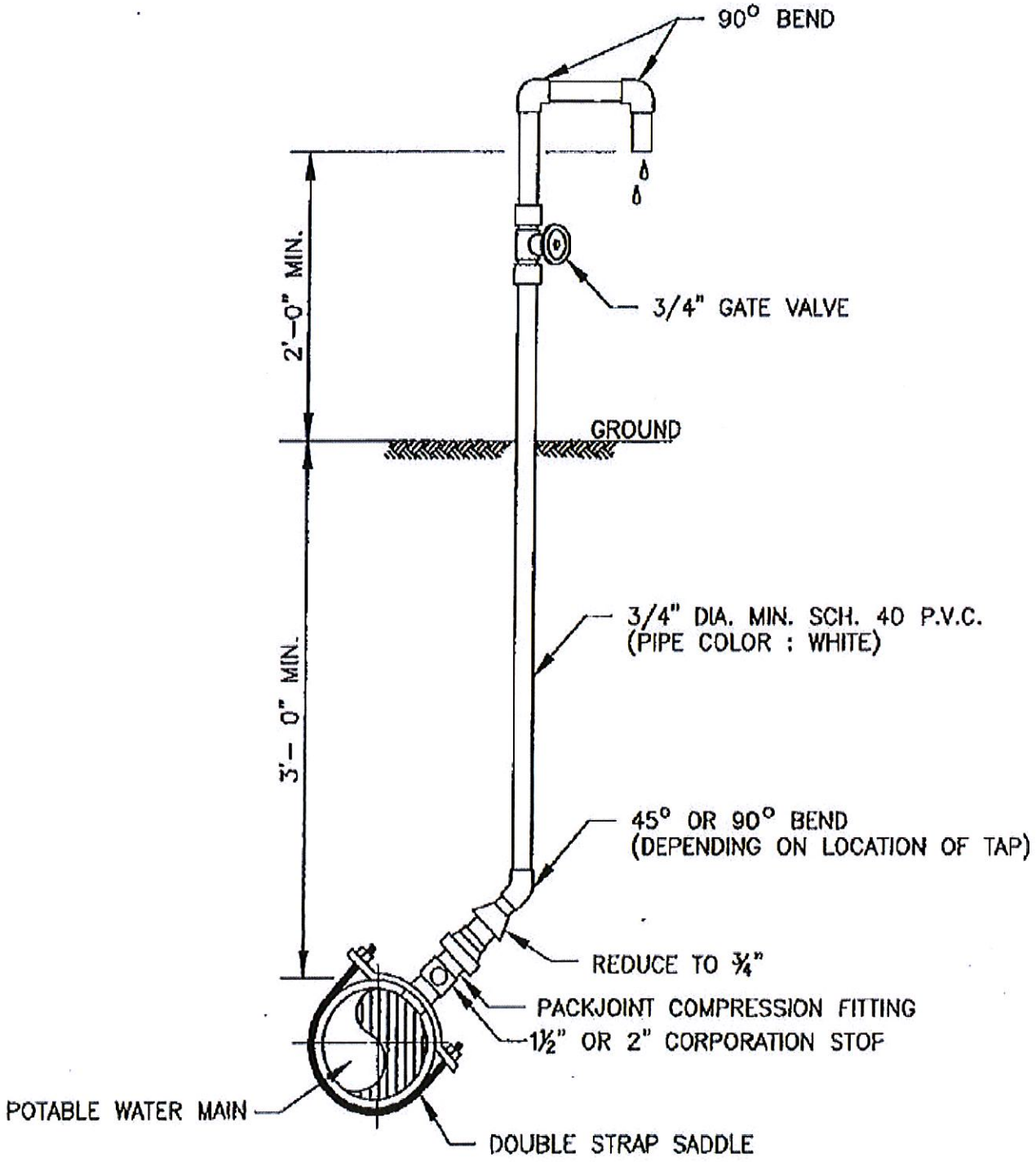

	Sampling Point Detail	JULIAN DELEON	Page 8 of 9
	The City of Avon Park Utilities Department 110 East Main Street	PE-67319	
	Josh Turner- Utilities Supervisor drawn by Taylor Smith	City Manager	January 13, 2016

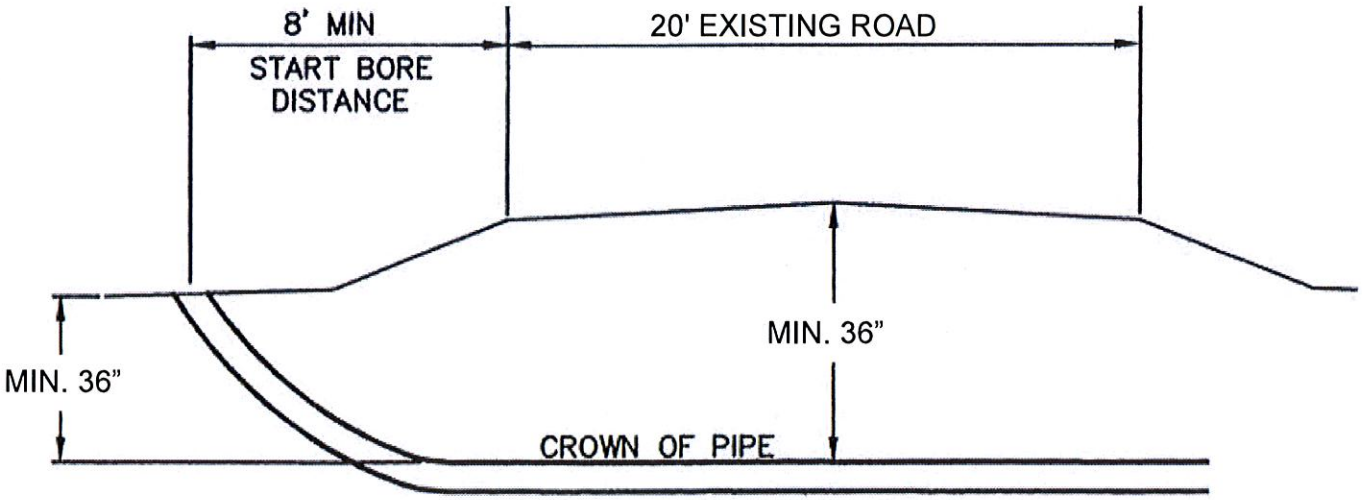

	Directional Bore Detail	JULIAN DELEON	Page 9 of 9
	The City of Avon Park Utilities Department 110 East Main Street	PE-67319	
	Josh Turner- Utilities Supervisor drawn by Taylor Smith	City Manager	January 13, 2016

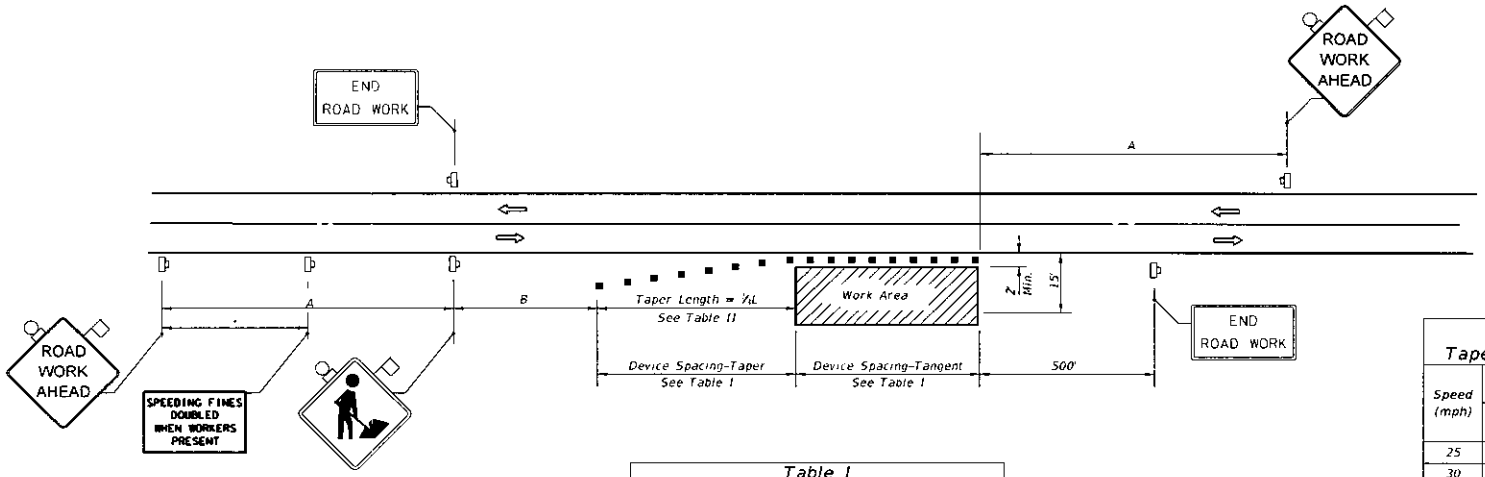

DISTANCE BETWEEN SIGNS		
Speed	Spacing (ft.)	
	A	B
40 mph or less	200	200
45 mph	350	350
50 mph or greater	500	500

*Midway between signs.

Table I Device Spacing				
Speed (mph)	Max. Distance Between Devices (ft.)			
	Cones or Tubular Markers		Type I or Type II Barricades or Vertical Panels or Drums	
	Taper	Tangent	Taper	Tangent
25	25	50	25	50
30 to 45	25	50	30	50
50 to 70	25	50	50	100

Table II Taper Length - Shoulder				
Speed (mph)	½L (ft)			Notes
	8' Shldr.	10' Shldr.	12' Shldr.	
25	28	35	42	$L=\frac{WS^2}{60}$
30	40	50	60	
35	55	68	82	
40	72	90	107	
45	120	150	180	L=WS
50	133	167	200	
55	147	183	220	
60	160	200	240	
65	173	217	260	
70	187	233	280	

8' minimum shoulder width

½L = Length of shoulder taper in feet

W = Width of total shoulder in feet (combined paved and unpaved width)

S = Posted speed limit (mph)

SYMBOLS

- Work Area
- Sign With 18" x 18" (Min.) Orange Flag And Type B Light
- Channelizing Device (See Index No. 600)
- Work Zone Sign
- Lane Identification + Direction of Traffic

GENERAL NOTES

1. When four or more work vehicles enter the through traffic lanes in a one hour period or less (excluding establishing and terminating the work area), the advanced FLAGGER sign shall be substituted for the WORKERS sign. For location of flaggers and FLAGGER signs, see Index No. 603.
2. SHOULDER WORK sign may be used as an alternate to the WORKER symbol sign only on the side where the shoulder work is being performed.
3. When a side road intersects the highway within the TTC zone, additional TTC devices shall be placed in accordance with other applicable TCZ Indexes.
4. For general TCZ requirements and additional information, refer to Index No. 600.

DURATION NOTES

1. Signs and channelizing devices may be omitted if all of the following conditions are met:
   a. Work operations are 60 minutes or less.
   b. Vehicles in the work area have high-intensity, rotating, flashing, oscillating, or strobe lights operating.

CONDITIONS

WHERE ANY VEHICLE, EQUIPMENT, WORKERS OR THEIR ACTIVITIES ENCROACH THE AREA CLOSER THAN 15' BUT NOT CLOSER THAN 2' TO THE EDGE OF TRAVEL WAY.