PLANS OF PROPOSED

CITY OF AVON PARK LAKE VERONA IMPLEMENTATION OF BEST MANAGEMENT PRACTICES

HIGHLANDS COUNTY, FLORIDA

INDEX OF IMPROVEMENT PLANS

SHEET #	SHEET DESCRIPTION
1	COVER SHEET
2	PROJECT AREA AND INDEX LAYOUT, SCALE 1"=200'
3	EXISTING AERIAL MAP, SCALE 1"=100'
4 – 6	PLAN VIEW, SCALE 1"=50'
7	SPECIAL AREA ENLARGEMENTS AND SPECIFICATIONS
8 – 9	DETAIL/SECTIONS
10 – 13	FLORIDA DEPARTMENT OF TRANSPORTATION INDEXES
14	MAINTENANCE OF TRAFFIC PLAN & CONSTRUCTION QUANTITIES

SCOPE OF WORK

1) CONSTRUCT DRAINAGE SYSTEM TO REDUCE THE AMOUNT OF POLLUTANTS BEING DISCHARGED DIRECTLY TO LAKE VERONA.
2) REMOVE AN EXISTING SIDEWALK ALONG CIRCLE STREET AND CONSTRUCT A CURB AND MULTI-USE PATH FROM A MIRACLE AVENUE TO NORTH LAKE AVENUE.
   a) CONSTRUCT TWO (2) RAINTANK DRAINAGE SYSTEMS ALONG CIRCLE STREET THAT WILL TREAT FLOWS FROM THE ROADWAYS BEFORE ENTERING LAKE VERONA.
   b) CONSTRUCT SWALES ALONG THE PROPOSED MULTI-USE PATH FROM NORTH LAKE AVENUE TO NORTH DELANEY AVENUE.
3) ADD CURBING, CONCRETE FLUMES AND SWALES ALONG THE MAJORITY OF ROADS TO TREAT THE RUNOFF AND HELP REMOVE POLLUTANTS.
4) RECONSTRUCT DRIVEWAYS AS NECESSARY.

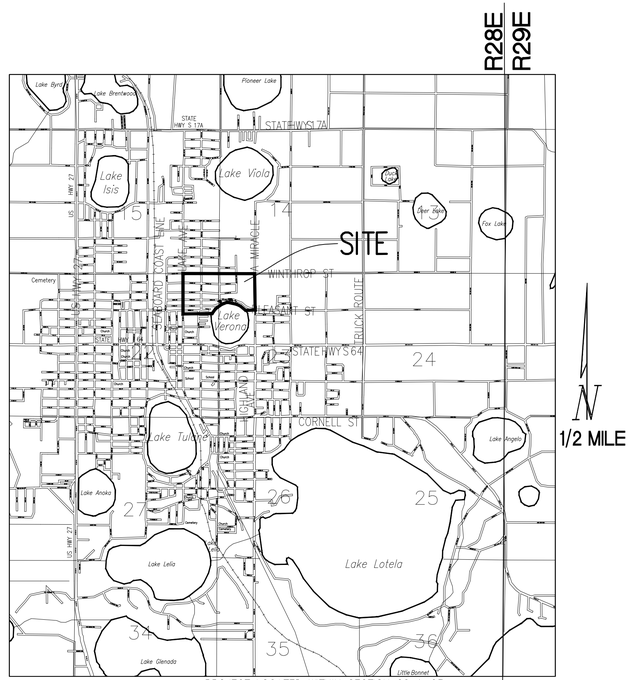

LOCATION MAP

PROJECT LOCATED WITHIN SECTION 22 & 23, TOWNSHIP 33 SOUTH, RANGE 28 EAST

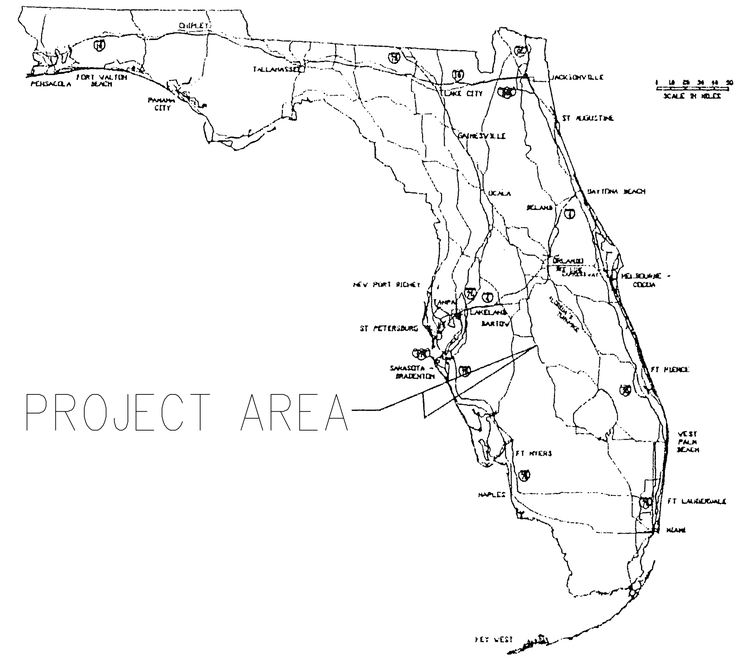

CITY OF AVON PARK STORMWATER QUALITY ANDD DRAINAGE IMPROVEMENTS FOR LAKE VERONA NORTHWEST DRAINAGE BASIN IS LOCATED WITHIN SECTION 22 AND 23, TOWNSHIP 33 SOUTH, RANGE 28 EAST

DATE OF PREPARATION:	14-NOV-13
DEVELOPMENT:	TOWN OF LAKE PLACID WASTEWATER COLLECTION SYSTEM INTERCONNECTION SEC. 31, TWP. 30S, RGE. 34E AND SEC. 6, TWP. 29E, RGE. 34E
OWNER:	TOWN OF LAKE PLACID 311 WEST INTERLAKE LAKE PLACID, FL 33852 863-699-3747
ENGINEER:	ROGER DALE POLSTON, P.E. POLSTON ENGINEERING, INC. 2925 KENILWORTH BOULEVARD SEBRING, FL 33870 (863) 385-5564 (863) 385-2462 FAX
SURVEYOR:	ROBERT SCHULER SHERCO, INC. 16 N. LAKE AVE. AVON PARK, FL 33825 (863) 453-4113
CONTRACTOR: ADDRESS:	NOT SELECTED AT THIS TIME WILL BE PUT OUT FOR BID AFTER PERMITTED

TOTAL BASIN CONSIDERED:	±80 AC.
PROJECT AREA:	9.6 AC.
ADDITIONAL SIDEWALK AREA:	9675 SQ.FT.
EXISTING USE:	RIGHT-OF-WAY
EXISTING ZONING:	R/W WITHIN RESIDENTIAL
SOIL TYPES:	ASTATULA SAND
GROUND COVER:	GRASS
STATE AND FEDERAL PERMITS REQUIRED:	SWFWMD

CALL 48 HOURS BEFORE YOU DIG IN FLORIDA

IT'S THE LAW

811

SUNSHINE STATE ONE CALL OF FLORIDA, INC.

ATTENTION IS DIRECTED TO THE FACT THAT THESE PLANS MAY HAVE BEEN ALTERED IN SIZE BY REPRODUCTION. THIS MUST BE CONSIDERED WHEN OBTAINING SCALED DATA.

AT LEAST 72 HOURS IN ADVANCE OF BEGINNING CONSTRUCTION OF THE PROJECT, THE CONTRACTOR SHALL CONTACT THE CITY OF AVON PARK MAINTENANCE OFFICE TO SECURE GENERAL USE PERMITS AND/OR OTHER PERMITS AS REQUIRED FOR WORKING WITHIN THE DEPARTMENT'S RIGHT-OF-WAY.

DATE	REMARK	DR	CH
14-NOV-13	INITIAL SUBMITTAL	MLW	

JOB # 13001

SCALE 1"=NTS

APPROVED BY: NOT VALID WITHOUT ORIGINAL SIGNATURE AND RAISED SEAL

SEAL

SIGNED: _____

DATE: _____

2925 KENILWORTH BLVD.,
SEBRING, FLORIDA 33870
863-385-5564 PHONE
863-385-2462 FAX

CERTIFICATE OF AUTHORIZATION # 6568
ROGER DALE POLSTON, P.E. # 33224
MARVIN LUTHER WOLFE P.E. # 46930
CLINTON E. HOWERTON JR. P.E. # 61021

Polston Engineering Inc.
CIVIL ENGINEERING CONSULTANTS

LAKE VERONA NORTHWEST BASIN

BEST MANAGEMENT PRACTICES PROJECT

COVER PAGE

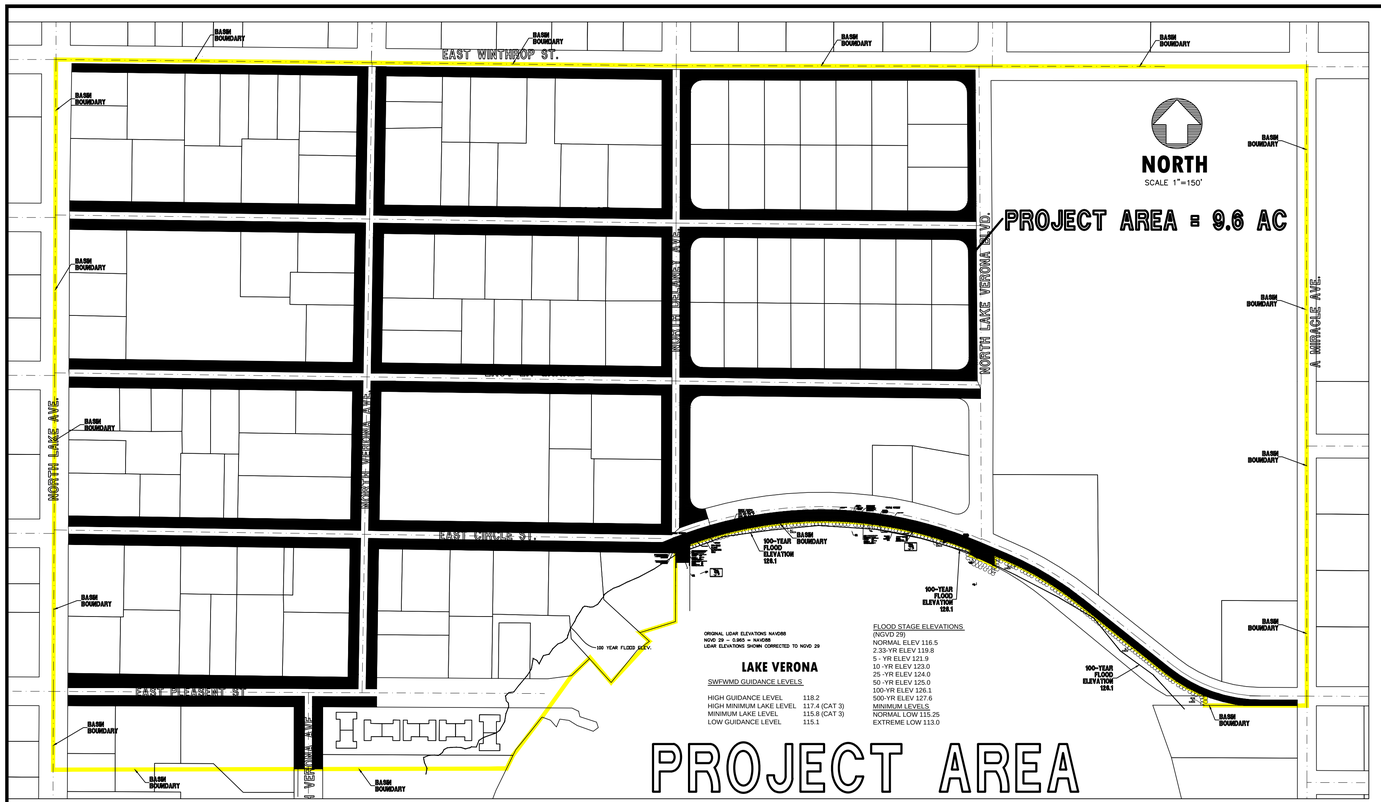

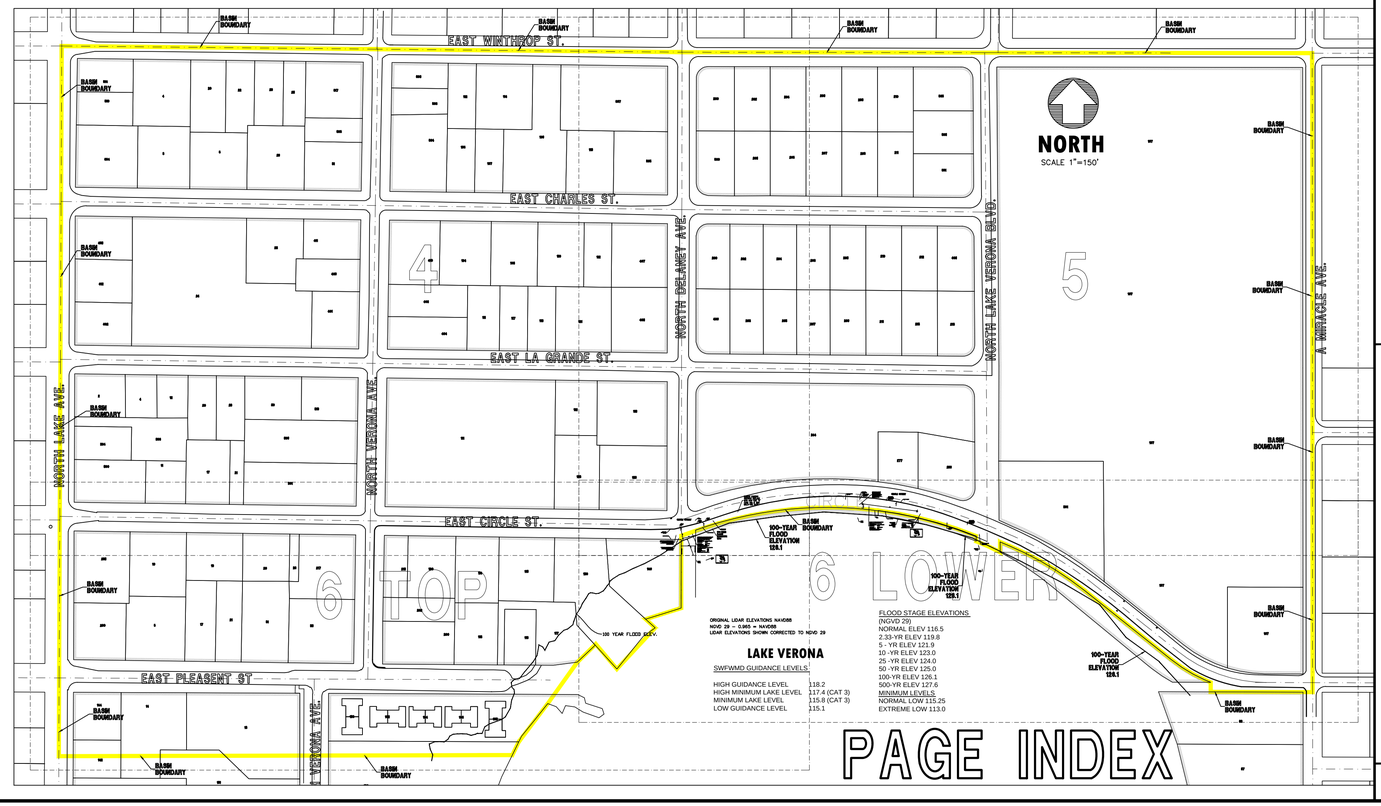

DATE	REMARK	DR.	CH
14-NOV-13	INITIAL SUBMITTAL	MLW	

JOB # 13001

SCALE 1"=200'

APPROVED BY:
NOT VALID WITHOUT ORIGINAL SIGNATURE AND ORIGINAL SEAL

SEAL

SIGNED: _____

DATE: _____

2925 KENILWORTH BLVD.,
SEBRING, FLORIDA 33870
863-385-2462 PHONE
863-385-2462 FAX

CERTIFICATE OF AUTHORIZATION # 6644
ROGER DALE POLSTON, P.E. # 33232
MARVIN LUTHER WOLFE P.E. # 46030
CLINTON E. HOWERTON JR. P.E. # 61021

Polston Engineering Inc.
CIVIL ENGINEERING CONSULTANTS

LAKE VERONA NORTHWEST BASIN
BEST MANAGEMENT PRACTICES PROJECT
PROJECT AREA AND INDEX PAGE

SHEET 2 OF 14

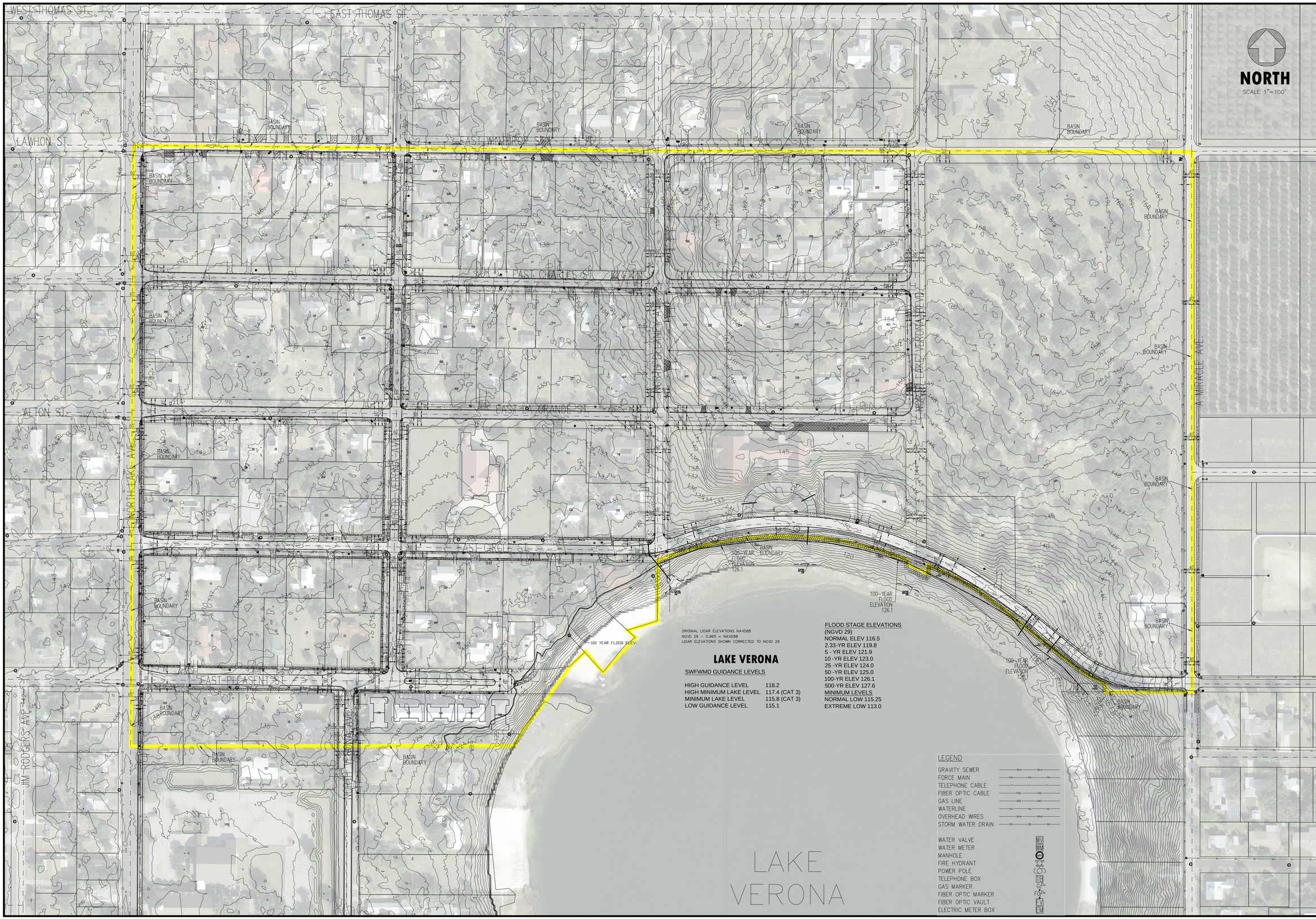

ORIGINAL LIDAR ELEVATIONS NAVD88
NGVD 29 = 0.965 = NAVD88
LIDAR ELEVATIONS SHOWN CORRECTED TO NGVD 29

LAKE VERONA

SWFWMD GUIDANCE LEVELS

HIGH GUIDANCE LEVEL	118.2
HIGH MINIMUM LAKE LEVEL	117.4 (CAT 3)
MINIMUM LAKE LEVEL	115.8 (CAT 3)
LOW GUIDANCE LEVEL	115.1

FLOOD STAGE ELEVATIONS
(NGVD 29)

NORMAL ELEV	116.5
2.33-YR ELEV	119.8
5 - YR ELEV	121.9
10 -YR ELEV	123.0
25 -YR ELEV	124.0
50 -YR ELEV	125.0
100-YR ELEV	126.1
500-YR ELEV	127.6
MINIMUM LEVELS	
NORMAL LOW	115.25
EXTREME LOW	113.0

LEGEND

GRAVITY SEWER	SEW
FORCE MAIN	FM
TELEPHONE CABLE	T
FIBER OPTIC CABLE	FOC
GAS LINE	GAS
WATERLINE	WL
OVERHEAD WIRES	OHW
STORM WATER DRAIN	SD
WATER VALVE	WV
WATER METER	WM
MANHOLE	MH
FIRE HYDRANT	
POWER POLE	
TELEPHONE BOX	TB
GAS MARKER	GM
FIBER OPTIC MARKER	FOM
FIBER OPTIC VAULT	FV
ELECTRIC METER BOX	EM

DATE	REMARK	DR	CH
14-NOV-13	INITIAL SUBMITTAL	MLW	

JOB # 13001

SCALE 1"=100'

APPROVED BY:
NOT VALID WITHOUT ORIGINAL SEAL AND SIGNATURE

SEAL

SIGNED:

DATE:

2925 KENILWORTH BLVD.,
SEBRING, FLORIDA 33870
863-385-2462 PHONE
863-385-2462 FAX

CERTIFICATE OF AUTHORIZATION # 6564
ROGER DALE POLSTON P.E. # 43237
MARVIN LUTHER WOLFE P.E. # 46030
CLINTON E. HOWERTON JR. P.E. # 61021

Polston Engineering Inc.
CIVIL ENGINEERING CONSULTANTS

LAKE VERONA NORTHWEST BASIN
BEST MANAGEMENT PRACTICES PROJECT
EXISTING CONDITIONS

SHEET 3 OF 14

LEGEND

GRAVITY SEWER	SEW
FORCE MAIN	FM
TELEPHONE CABLE	T
FIBER OPTIC CABLE	FOC
GAS LINE	GAS
WATERLINE	WL
OVERHEAD WIRES	OHW
STORM WATER DRAIN	SS
WATER VALVE	WV
WATER METER	WM
MANHOLE	MH
FIRE HYDRANT	FH
POWER POLE	PP
TELEPHONE BOX	TB
GAS MARKER	GM
FIBER OPTIC MARKER	FOM
FIBER OPTIC VAULT	FV
ELECTRIC METER BOX	EM

DATE	REMARK	DR	CH
14-NOV-13	INITIAL SUBMITTAL	MLW	

JOB # 13001

SCALE 1"=50'

APPROVED BY: NOT FOR CONSTRUCTION UNTIL SIGNED AND SEALED

SEAL

SIGNED:

DATE:

2925 KENILWORTH BLVD.,
SEBRING, FLORIDA 33870
863-385-2452 PHONE
863-385-2462 FAX

CERTIFICATE OF AUTHORIZATION # 6564
PROFESSIONAL ENGINEERS # 23237
MARVIN LUTHER WOLFE P.E. # 46030
CLINTON E. HOWERTON JR. P.E. # 63021

Polston Engineering Inc.
CIVIL ENGINEERING CONSULTANTS

LAKE VERONA NORTHWEST BASIN
BEST MANAGEMENT PRACTICES PROJECT
PROPOSED LAYOUT (NORTHWESTERN AREA)

SCALE 1"=50'

LEGEND

GRAVITY SEWER	SEW
FORCE MAIN	FM
TELEPHONE CABLE	T
FIBER OPTIC CABLE	FOC
GAS LINE	GAS
WATERLINE	WL
OVERHEAD WIRES	OHW
STORM WATER DRAIN	SD
WATER VALVE	WV
WATER METER	WM
MANHOLE	MH
FIRE HYDRANT	FH
POWER POLE	PP
TELEPHONE BOX	TB
GAS MARKER	GM
FIBER OPTIC MARKER	FOM
FIBER OPTIC VAULT	FV
ELECTRIC METER BOX	EM

DATE	REMARK	DR	CH
14-NOV-13	INITIAL SUBMITTAL	MLW	

JOB # 13001

SCALE 1"=50'

APPROVED BY: NOT VALID WITHOUT ORIGINAL SIGNATURE AND ORIGINAL SEAL

SEAL

SIGNED:

DATE:

2925 KENILWORTH BLVD.,
SEBRING, FLORIDA 33870
863-385-2462 OFFICE
863-385-2462 FAX

CERTIFICATE OF AUTHORIZATION # 5564
LICENSED BUSINESS # 32327
MARVIN LUTHER WOLFE P.E. # 46030
CLINTON E. HOWERTON JR. P.E. # 61021

Polston Engineering Inc.
CIVIL ENGINEERING CONSULTANTS

LAKE VERONA NORTHWEST BASIN
BEST MANAGEMENT PRACTICES PROJECT
PROPOSED LAYOUT (NORTHEASTERN AREA)

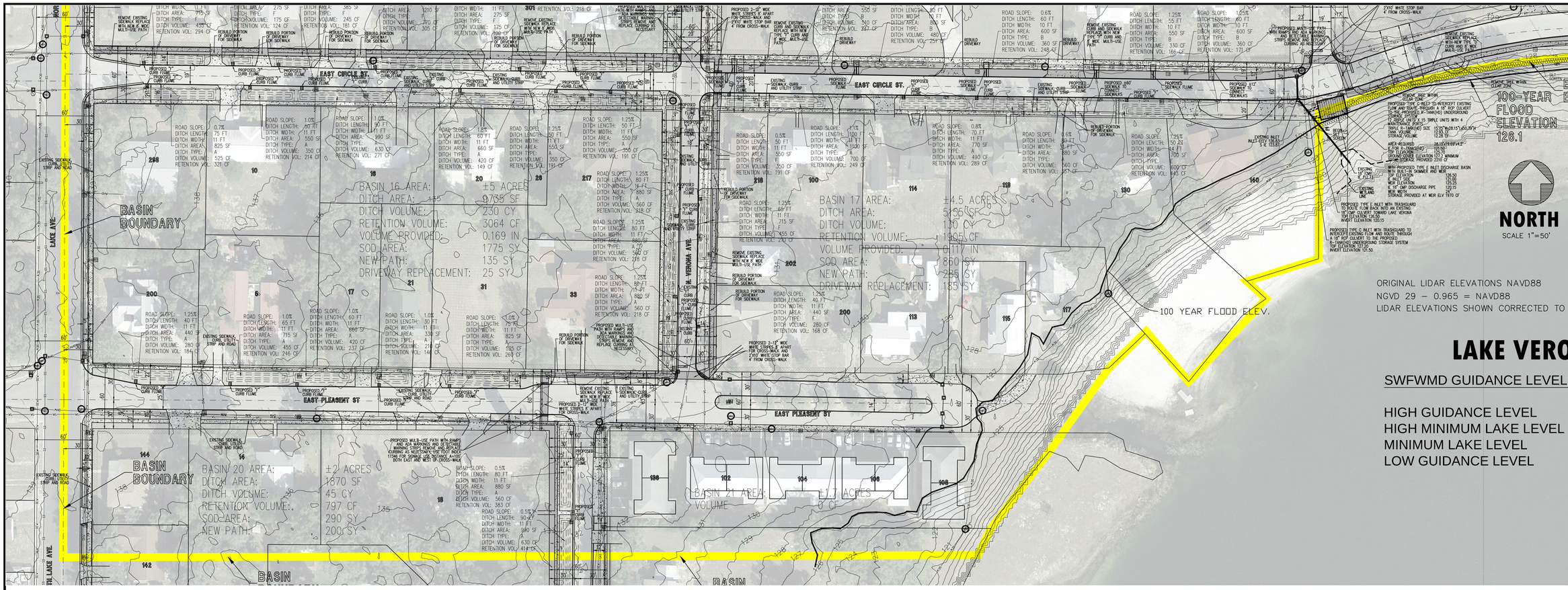

ORIGINAL LIDAR ELEVATIONS NAVD88
NGVD 29 – 0.965 = NAVD88
LIDAR ELEVATIONS SHOWN CORRECTED TO N

LAKE VERO

SWFWMD GUIDANCE LEVELS

HIGH GUIDANCE LEVEL
HIGH MINIMUM LAKE LEVEL
MINIMUM LAKE LEVEL
LOW GUIDANCE LEVEL

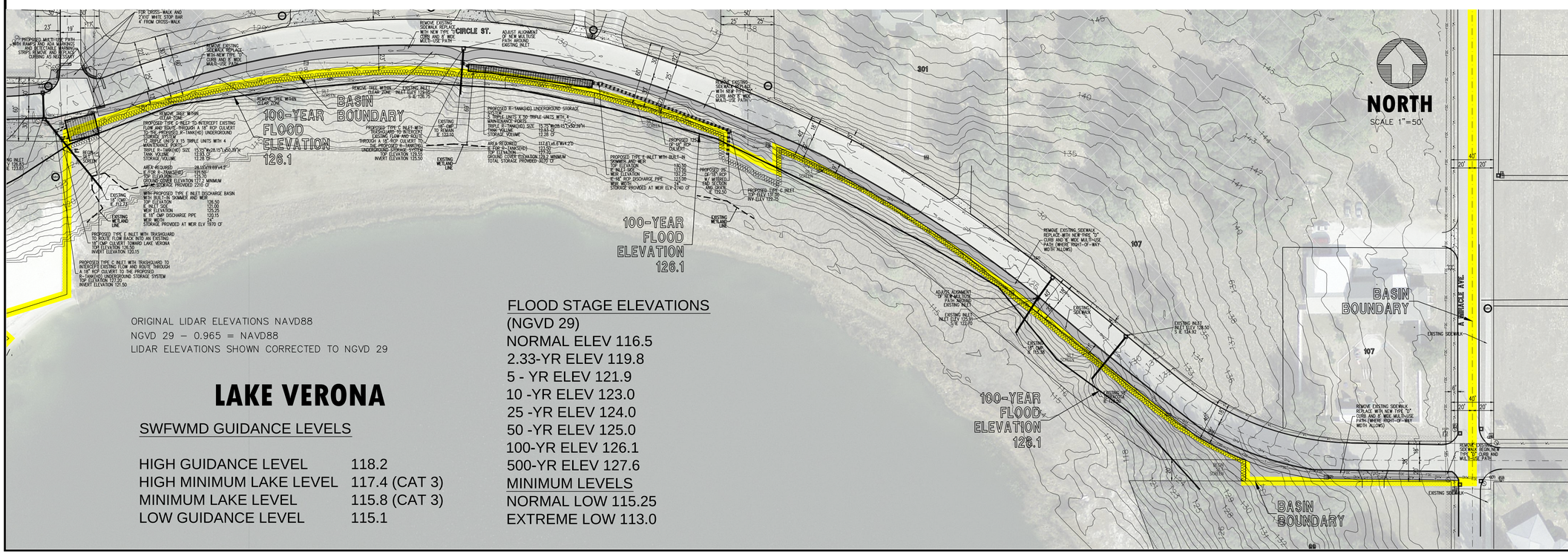

ORIGINAL LIDAR ELEVATIONS NAVD88
NGVD 29 – 0.965 = NAVD88
LIDAR ELEVATIONS SHOWN CORRECTED TO NGVD 29

LAKE VERONA

SWFWMD GUIDANCE LEVELS

HIGH GUIDANCE LEVEL	118.2
HIGH MINIMUM LAKE LEVEL	117.4 (CAT 3)
MINIMUM LAKE LEVEL	115.8 (CAT 3)
LOW GUIDANCE LEVEL	115.1

FLOOD STAGE ELEVATIONS
(NGVD 29)
NORMAL ELEV 116.5
2.33-YR ELEV 119.8
5 - YR ELEV 121.9
10 -YR ELEV 123.0
25 -YR ELEV 124.0
50 -YR ELEV 125.0
100-YR ELEV 126.1
500-YR ELEV 127.6
MINIMUM LEVELS
NORMAL LOW 115.25
EXTREME LOW 113.0

LEGEND

GRAVITY SEWER
FORCE MAIN
TELEPHONE CABLE
FIBER OPTIC CABLE
GAS LINE
WATERLINE
OVERHEAD WIRES
STORM WATER DRAIN
WATER VALVE
WATER METER
MANHOLE
FIRE HYDRANT
POWER POLE
TELEPHONE BOX
GAS MARKER
FIBER OPTIC MARKER
FIBER OPTIC VAULT
ELECTRIC METER BOX

DATE	REMARK	DR	CH
14-NOV-13	INITIAL SUBMITTAL	MLW	

JOB # 13001

SCALE 1"=50'

APPROVED BY:
NOT VALID WITHOUT ORIGINAL SIGNATURE AND ORIGINAL SEAL

SEAL

SIGNED:
DATE:

2925 KENILWORTH BLVD.,
SEBRING, FLORIDA 33870
863-385-5691 PHONE
863-385-2462 FAX

CERTIFICATE OF AUTHORIZATION # 5684
ROGER D. POLSTON JR. P.E. # 33237
MARVIN LUTHER WOLFE P.E. # 46030
CLINTON E. HOWERTON JR. P.E. # 63021

Polston Engineering Inc.
CIVIL ENGINEERING CONSULTANTS

LAKE VERONA NORTHWEST BASIN

BEST MANAGEMENT PRACTICES PROJECT

PROPOSED LAYOUT (SOUTHWEST AND SOUTHEAST AREA)

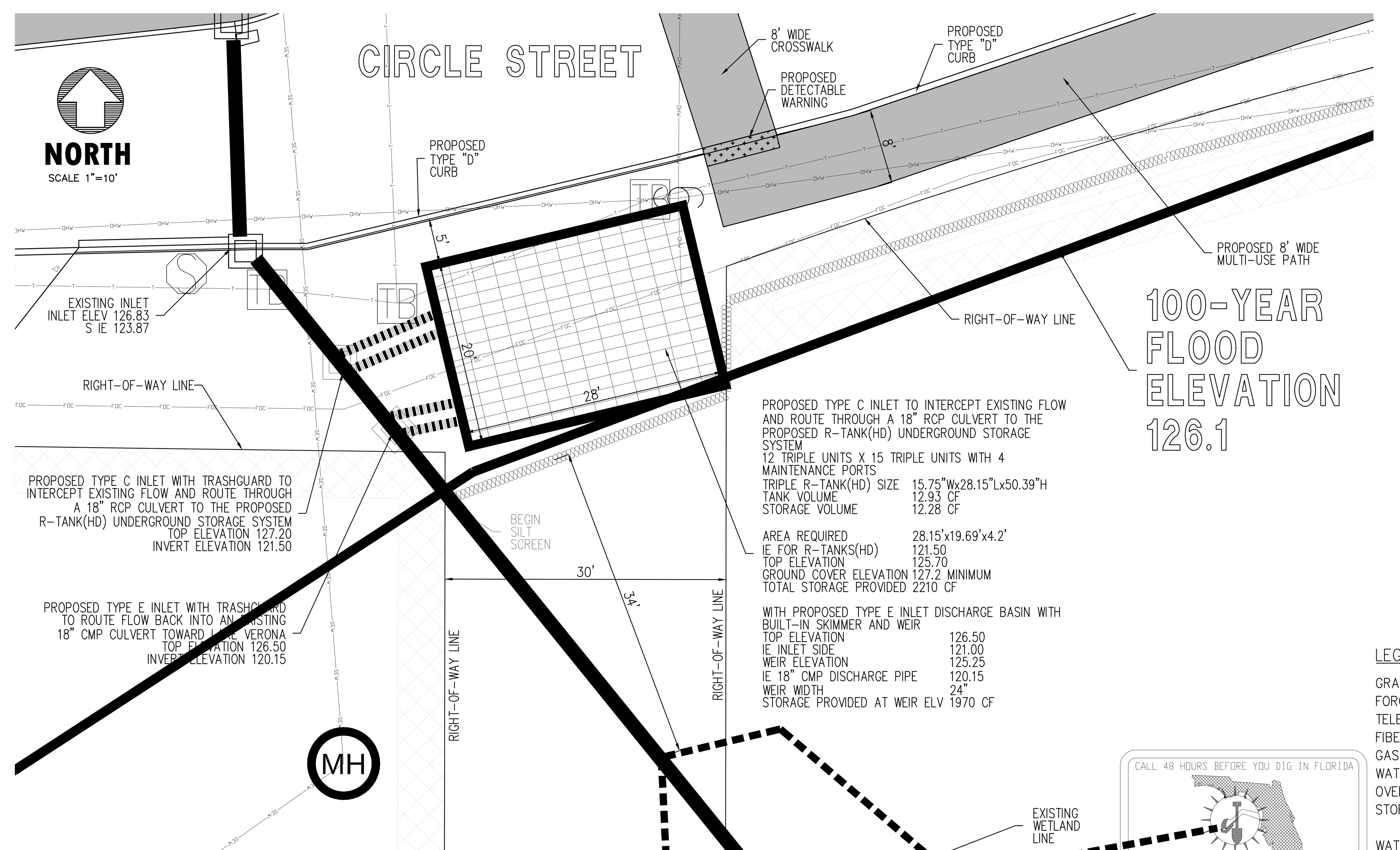

LEGEND

GRAVITY SEWER
FORCE MAIN
TELEPHONE CABLE
FIBER OPTIC CABLE
GAS LINE
WATERLINE
OVERHEAD WIRES
STORM WATER DRAIN

WATER VALVE
WATER METER
MANHOLE
FIRE HYDRANT
POWER POLE
TELEPHONE BOX
GAS MARKER
FIBER OPTIC MARKER
FIBER OPTIC VAULT
ELECTRIC METER BOX

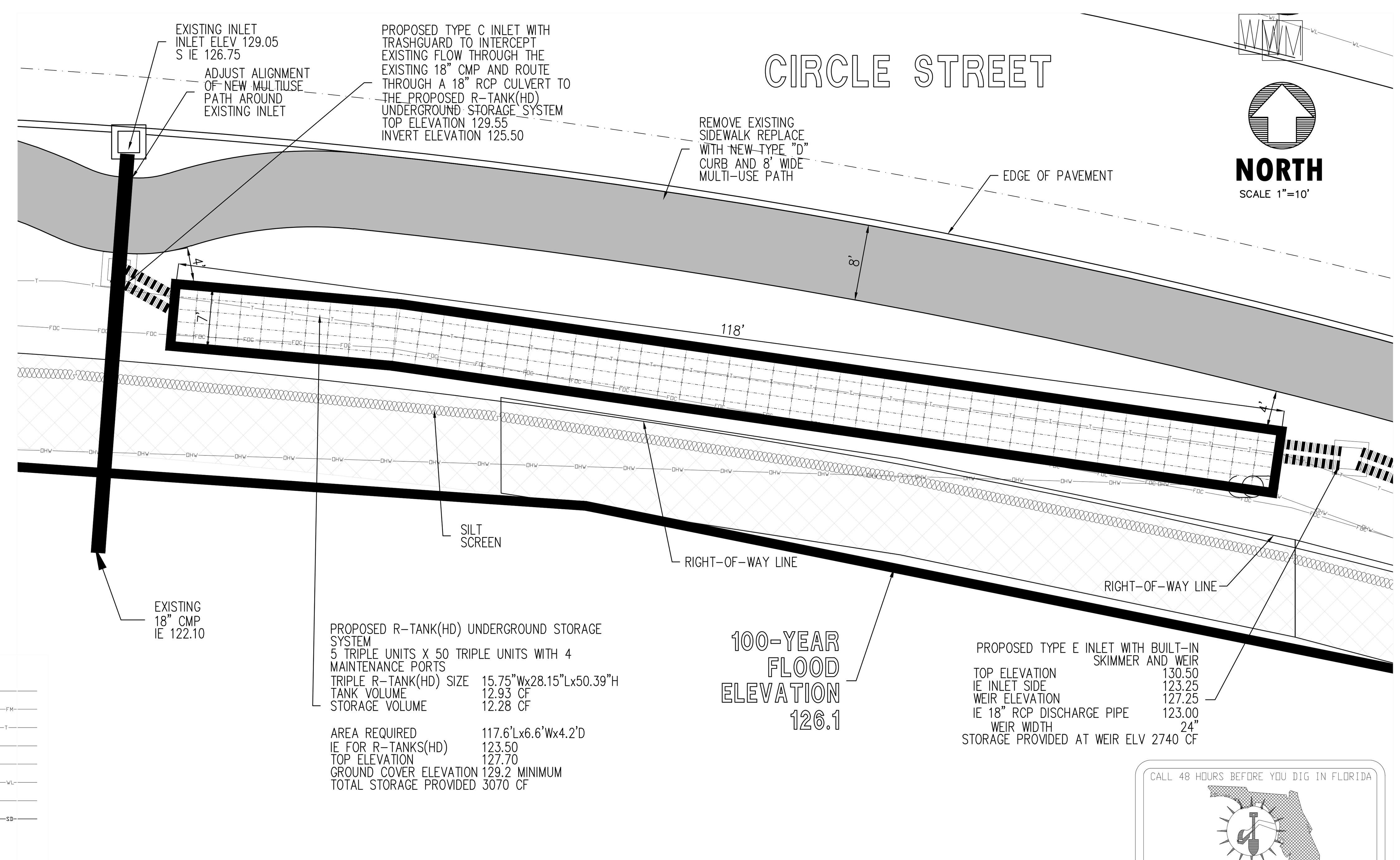

GENERAL CONSTRUCTION NOTES

1. LOCATIONS, ELEVATIONS, AND DIMENSIONS OF EXISTING UTILITIES, STRUCTURES, AND OTHER FEATURES ARE SHOWN ACCORDING TO INFORMATION AVAILABLE AT THE TIME OF PREPARATION OF THESE PLANS. THE CONTRACTOR SHALL VERIFY THE LOCATIONS, ELEVATIONS, AND DIMENSIONS OF ALL EXISTING UTILITIES, STRUCTURES AND OTHER FEATURES AFFECTING THIS WORK PRIOR TO CONSTRUCTION.
2. THE CONTRACTOR SHALL CHECK PLANS AND FIELD CONDITIONS FOR CONFLICTS AND DISCREPANCIES PRIOR TO CONSTRUCTION. THE CONTRACTOR SHALL NOTIFY THE OWNER'S ENGINEER OF ANY CONFLICT BEFORE PERFORMING ANY WORK IN THE AFFECTED AREA.
3. THE CONTRACTOR IS RESPONSIBLE FOR REPAIRING ANY DAMAGE TO EXISTING FACILITIES, ABOVE OR BELOW GROUND, THAT MAY OCCUR AS A RESULT OF THE WORK PERFORMED BY THE CONTRACTOR.
4. IT IS THE CONTRACTOR'S RESPONSIBILITY TO BECOME FAMILIAR WITH THE PERMIT AND INSPECTION REQUIREMENTS OF THE VARIOUS GOVERNMENTAL AGENCIES. THE CONTRACTOR SHALL OBTAIN ALL NECESSARY PERMITS PRIOR TO CONSTRUCTION, AND SCHEDULE INSPECTIONS ACCORDING TO AGENCY INSTRUCTION.
5. ALL SPECIFICATIONS AND DOCUMENTS REFERRED TO SHALL BE OF LATEST REVISIONS AND/OR LATEST EDITION.
6. ALL WORK PERFORMED SHALL COMPLY WITH THE REGULATIONS AND ORDINANCES OF THE VARIOUS GOVERNMENTAL AGENCIES HAVING JURISDICTION OVER THE WORK, INCLUDING LANDSCAPING.
7. CONTRACTOR SHALL SUBMIT FOR REVIEW TO THE OWNER'S ENGINEER SHOP DRAWINGS ON ALL PRECAST AND MANUFACTURED ITEMS TO BE USED ON THIS SITE. FAILURE TO OBTAIN APPROVAL BEFORE INSTALLATION MAY RESULT IN REMOVAL AND REPLACEMENT AT CONTRACTOR'S EXPENSE. ENGINEER'S APPROVAL OF A SHOP DRAWING DOES NOT RELIEVE CONTRACTOR'S RESPONSIBILITY FOR PERFORMANCE OF THE ITEM.
8. WORK PERFORMED UNDER THIS CONTRACT SHALL INTERFACE SMOOTHLY WITH OTHER WORK BEING PERFORMED ON SITE BY OTHER CONTRACTORS AND UTILITY COMPANIES. IT WILL BE NECESSARY FOR THE CONTRACTOR TO COORDINATE AND SCHEDULE HIS ACTIVITIES, WHERE NECESSARY WITH OTHER CONTRACTOR'S AND UTILITY COMPANIES.
9. BACKFILL MATERIAL SHALL BE SOLIDLY TAMPED AND COMPACTED TO A FIRMNESS EQUAL TO THAT OF THE SOIL ADJACENT TO THE TRENCH AROUND PIPES IN 6" LAYERS UP TO AN UNDISTURBED LEVEL OF AT LEAST 1' ABOVE THE TOP OF THE PIPE. IN AREAS TO BE PAVED, BACKFILL SHALL BE COMPACTED TO 100% MAXIMUM DENSITY AS DETERMINED BY AASHTO T-99.
10. CONCRETE SHALL HAVE A COMPRESSIVE STRENGTH OF AT LEAST 3,000 P.S.I. IN 28 DAYS, UNLESS OTHERWISE NOTED, SPECIFIED OR REQUIRED.
11. REINFORCING SHALL BE BILLET STEEL BARS CONFORMING TO ASTM A615 GRADE 40 OR BETTER.
12. THE CONTRACTOR/SUBCONTRACTOR SHALL PLACE A 1" DEEP CONTRACTION JOINT EVERY 10' IN THE SIDEWALK.
13. SIDEWALK CONSTRUCTION SHALL BE FLUSH WITH PAVEMENT WHERE THEY ARE ADJACENT OR MEET, UNLESS OTHERWISE SHOWN.
14. MATERIALS AND CONSTRUCTION METHODS FOR STREETS AND STORM DRAINAGE CONSTRUCTION SHALL BE IN ACCORDANCE WITH THE LOCAL REGULATORY AGENCY AND THE FLORIDA DEPARTMENT OF TRANSPORTATION STANDARD SPECIFICATIONS FOR ROAD AND BRIDGE CONSTRUCTION, 1994, OR LATEST REVISION THEREOF AND SUPPLEMENTAL SPECIFICATIONS THERETO.
15. ALL PIPE NOTED ON THE PLANS AS RCP SHALL BE REINFORCED CONCRETE PIPE, CLASS III, WITH RUBBER GASKET JOINTS.
16. REPAIR AND REPLACEMENT OF ALL PRIVATE AND PUBLIC PROPERTY AFFECTED BY THIS WORK SHALL BE RESTORED TO A CONDITION EQUAL TO OR BETTER THAN EXISTING CONDITIONS BEFORE COMMENCING CONSTRUCTION WORK UNLESS SPECIFICALLY EXEMPTED BY THE PLANS. ADDITIONAL COSTS ARE INCIDENTAL TO OTHER CONSTRUCTION AND NO EXTRA COMPENSATION WILL BE ALLOWED.
17. RECORD DRAWINGS:
THE CONTRACTOR SHALL BE RESPONSIBLE FOR RECORDING INFORMATION ON A SET OF THE APPROVED PLANS CONCURRENTLY WITH CONSTRUCTION PROGRESS. WITHIN TWO WEEKS FOLLOWING FINAL INSPECTION THE CONTRACTOR SHALL SUBMIT ONE SET OF RECORD DRAWINGS TO THE ENGINEER OF RECORD. THE FINAL RECORD DRAWINGS SHALL COMPLY WITH THE FOLLOWING REQUIREMENTS:
1. DRAWINGS TO BE LEGIBLY MARKED TO RECORD ACTUAL CONSTRUCTION.
2. DRAWINGS SHALL SHOW ACTUAL LOCATION OF ALL UTILITIES, AND RELATED APPURTENANCES, BOTH ABOVE AND BELOW GROUND. ALL CHANGES TO PIPING LOCATION INCLUDING HORIZONTAL & VERTICAL LOCATIONS OF UTILITIES & APPURTENANCES SHALL BE CLEARLY SHOWN AND REFERENCED TO PERMANENT SURFACE IMPROVEMENTS. DRAWINGS SHALL ALSO SHOW ACTUAL INSTALLED PIPE MATERIAL, ETC.
3. DRAWINGS SHALL CLEARLY SHOW ALL FIELD CHANGES OF DIMENSION AND DETAIL INCLUDING CHANGES MADE BY FIELD ORDER OR BY CHANGE ORDER.
4. DRAWINGS SHALL CLEARLY SHOW ALL DETAILS NOT ON ORIGINAL CONTRACT DRAWINGS BUT CONSTRUCTED IN THE FIELD. ALL EQUIPMENT AND PIPING RELOCATION SHALL BE CLEARLY SHOWN.
5. LOCATIONS OF ALL MANHOLES, HYDRANTS, VALVES, & VALVE BOXES SHALL BE SHOWN.
6. THE CONTRACTOR SHALL PROVIDE CERTIFIED RECORD DRAWINGS, SIGNED AND SEALED BY A PROFESSIONAL LAND SURVEYOR. THE RECORD DRAWINGS SHALL SHOW FINAL GRADES AND LOCATIONS ON ALL UTILITIES INCLUDING THE SANITARY SEWER, WATER, PRODUCT PIPING, AND STORM WATER COLLECTION SYSTEM (I.E. PIPES, INLETS, AND PONDS. THE CONTRACTOR SHALL PROVIDE TEN COPIES OF THE CERTIFIED RECORD DRAWINGS TO THE ENGINEER. THE AS-BUILT CADD DRAWING IN ELECTRONIC FORM SHALL ALSO BE PROVIDED.
18. CLASS "6" TYPE I BEDDING SHALL BE USED UNLESS INDICATED OTHERWISE ON THE DRAWINGS, OR BY THE ENGINEER.
19. SOILS ENGINEER TO SUPPLY THE DESIGN ENGINEER WITH A PHOTOCOPY OF ALL COMPACTION TESTS, ASPHALT RESULTS, AND CONCRETE RESULTS THE SOILS ENGINEER IS TO CERTIFY TO THE DESIGN ENGINEER IN WRITING THAT ALL TESTING REQUIREMENTS REQUIRED BY THE LOCAL REGULATORY AGENCY AND THE FLORIDA DEPARTMENT OF TRANSPORTATION(FDOT) FOR THE IMPROVEMENTS AS REQUIRED BY THE ENGINEERING CONSTRUCTION DRAWINGS FOR THE ON-SITE HAVE BEEN SATISFIED.
20. CONTRACTOR SHALL REVIEW SOIL REPORTS AND BORINGS PRIOR TO BIDDING THE PROJECT AND COMMENCING CONSTRUCTION.
21. IRRIGATION SYSTEM SHALL HAVE COLOR CODED PIPING AND LABELING ON THE PIPE TO ENSURE DIFFERENTIATION FROM POTABLE WATER PIPING.
22. AT LEAST 3 WORKING DAYS PRIOR TO CONSTRUCTION THE CONTRACTOR SHALL NOTIFY THE ENGINEER AND APPROPRIATE AGENCIES AND SUPPLY THEM WITH ALL REQUIRED SHOP DRAWINGS, THE CONTRACTOR'S NAME, STARTING DATE, PROJECTED SCHEDULE, AND OTHER INFORMATION AS REQUIRED. ANY WORK PERFORMED PRIOR TO NOTIFYING THE ENGINEER OR WITHOUT AGENCY INSPECTOR PRESENT MAY BE SUBJECT TO REMOVAL AND REPLACEMENT AT THE CONTRACTOR'S EXPENSE.
23. OWNER SPECIFIC SPECIFICATIONS TO BE PROVIDED TO CONTRACTOR DURING BIDDING.
24. CONTRACTOR SHALL ADHERE TO THE FOLLOWING DETAILS, STANDARDS, REGULATIONS, AND ORDINANCES: COUNTY HEALTH DEPARTMENT, FLORIDA DEPARTMENT OF ENVIRONMENTAL PROTECTION, FLORIDA DEPARTMENT OF TRANSPORTATION, SOUTHWEST FLORIDA WATER MANAGEMENT DISTRICT, CITY OF AVON PARK.
25. ALL SITE WORK SHALL CONFORM TO THE LATEST S.W.F.W.M.D., F.D.O.T., CITY AND COUNTY REGULATIONS, SPECIFICATIONS, AND GUIDELINES.
26. ALL EXISTING SURVEY MONUMENTS, GPS MONUMENTS OR PUBLIC LAND CORNERS SHALL BE PROTECTED. IF A CORNER OR MONUMENT IS IN DANGER OF BEING DESTROYED AND HAS NOT BEEN PROPERLY REFERENCED THE CONTRACTORS CONSTRUCTION MANAGER SHALL NOTIFY THE CITY PUBLIC WORKS DIRECTOR WITHOUT DELAY BY TELEPHONE.

SAFETY NOTES

1. DURING THE CONSTRUCTION AND/OR MAINTENANCE OF THIS PROJECT, THE CONTRACTOR SHALL COMPLY WITH REGULATIONS. THE CONTRACTOR OR HIS REPRESENTATIVE SHALL BE RESPONSIBLE FOR THE CONTROL AND SAFETY OF THE TRAVELING PUBLIC AND THE SAFETY OF ITS PERSONNEL. LABOR SAFETY REGULATIONS SHALL BE AS SET FORTH BY OSHA IN THE FEDERAL REGISTER OF THE DEPARTMENT OF LABOR.
2. THE MINIMUM STANDARDS AS SET FORTH IN THE CURRENT EDITION OF THE STATE OF FLORIDA, MANUAL ON TRAFFIC CONTROL AND SAFE PRACTICES FOR STREET AND HIGHWAY CONSTRUCTION, MAINTENANCE AND UTILITY OPERATIONS SHALL BE FOLLOWED IN THE DESIGN APPLICATION, INSTALLATION, MAINTENANCE, AND REMOVAL OF ALL TRAFFIC CONTROL DEVICES, WARNING DEVICES, AND BARRIERS NECESSARY TO PROTECT THE PUBLIC AND WORKERS FROM HAZARDS WITHIN THE PROJECT LIMITS.
3. ALL TRAFFIC CONTROL MARKINGS, FLAGGERS, AND DEVICES SHALL CONFORM TO THE PROVISIONS SET FORTH IN THE MANUAL ON UNIFORM TRAFFIC CONTROL DEVICES PREPARED BY THE U.S. DEPARTMENT OF TRANSPORTATION FEDERAL HIGHWAY ADMINISTRATION.
4. IT SHALL BE THE SOLE RESPONSIBILITY OF THE CONTRACTOR TO COMPLY WITH AND ENFORCE ALL APPLICABLE SAFETY REGULATIONS. THE ABOVE INFORMATION HAS BEEN PROVIDED FOR THE CONTRACTOR'S INFORMATION ONLY AND DOES NOT IMPLY THAT THE OWNER OR ENGINEER WILL INSPECT AND/OR ENFORCE SAFETY REGULATIONS.

STANDARD UTILITY NOTES

1. CHAPTER 77-153 OF THE FLORIDA STATUTES REQUIRES THAT AN EXCAVATOR NOTIFY ALL GAS UTILITIES A MINIMUM OF TWO WORKING DAYS PRIOR TO EXCAVATING. MAPS SHOW ONLY THE APPROXIMATE LOCATION OF GAS MAINS AND DO NOT SHOW SERVICE LINES. THE ONLY SAFE AND PROPER WAY TO LOCATE EITHER MAINS OR SERVICE LINES IS BY AN ON-SITE INSPECTION BY THE RESPECTIVE GAS PERSONNEL. THEREFORE, EXCAVATORS ARE INSTRUCTED TO TELEPHONE THE RESPECTIVE GAS COMPANY TWO WORKING DAYS BEFORE ENTERING A CONSTRUCTION AREA.
2 . ALL UNDERGROUND UTILITIES MUST BE IN PLACE, TESTED AND INSPECTED AS REQUIRED PRIOR TO BASE AND SURFACE CONSTRUCTION.
3 . THE CONTRACTOR SHALL EXERCISE EXTREME CAUTION IN AREAS OF BURIED UTILITIES AND SHALL PROVIDE AT LEAST 48 HOURS NOTICE TO THE VARIOUS UTILITY COMPANIES IN ORDER TO PERMIT MARKING THE LOCATIONS OF EXISTING UNDERGROUND UTILITIES IN ADVANCE OF CONSTRUCTION, BY CALLING FLORIDA SUNSHINE STATE ONE CALL CENTER OF FLORIDA, INC. AT 1-800-432-4770. IT IS THE CONTRACTOR'S RESPONSIBILITY TO NOTIFY "SUNSHINE" FORTY-EIGHT (48) HOURS PRIOR TO ANY CLEARING OF CONSTRUCTION TO IDENTIFY ALL UTILITY LOCATIONS.
4 . IT IS THE CONTRACTOR'S RESPONSIBILITY TO NOTIFY ALL UTILITY COMPANIES TO DISCONNECT OR REMOVE THEIR FACILITIES PRIOR TO REMOVING OR DEMOLISHING ANY EXISTING STRUCTURES FROM THE SITE. ALL UTILITIES INCLUDING, BUT NOT NECESSARILY LIMITED TO, THE FOLLOWING SHOULD BE CONTACTED BY THE CONTRACTOR:
1. GAS
2. TELEPHONE
3. CABLE
4. POWER
5. CITY/COUNTY WATER AND SEWER
6. CITY/COUNTY/STATE TRAFFIC SIGNAL UTILITY
(FIBER, HARDWIRE TRAFFIC SIGNAL INTERCONNECT)
5 . THE LOCATION OF ALL EXISTING UTILITIES SHOWN ON THE PLANS HAVE BEEN DETERMINED FROM THE BEST INFORMATION AVAILABLE. THE ENGINEER ASSUMES NO RESPONSIBILITY FOR ACCURACY. IT SHALL BE THE CONTRACTOR'S RESPONSIBILITY TO NOTIFY THE VARIOUS UTILITIES AND TO MAKE THE NECESSARY ARRANGEMENTS FOR ANY RELOCATION'S OF THESE UTILITIES WITH THE OWNER OF THE UTILITY. THE CONTRACTOR SHALL EXERCISE CAUTION WHEN CROSSING ANY UNDERGROUND UTILITY, WHETHER SHOWN ON THE PLANS OR LOCATED BY THE UTILITY COMPANY. ALL UTILITIES WHICH INTERFACE WITH THE PROPOSED CONSTRUCTION SHALL BE RELOCATED BY THE RESPECTIVE UTILITY COMPANIES AND THE CONTRACTOR SHALL COOPERATE WITH THE UTILITY COMPANIES DURING RELOCATION OPERATIONS. ANY DELAY OR INCONVENIENCE CAUSED TO THE CONTRACTOR BY THE VARIOUS UTILITIES SHALL BE INCIDENTAL TO THE CONTRACT AND NO EXTRA COMPENSATION WILL BE ALLOWED.

CLEARING AND EROSION CONTROL NOTES

1. PRIOR TO ANY SITE CLEARING, ALL TREES SHOWN TO REMAIN ON THE CONSTRUCTION PLANS SHALL BE PROTECTED IN ACCORDANCE WITH THE LOCAL REGULATORY AGENCY'S TREE ORDINANCE AND DETAILS CONTAINED IN THESE PLANS. IT SHALL BE THE CONTRACTOR'S RESPONSIBILITY TO MAINTAIN THESE TREES IN GOOD CONDITION. NO TREES SHOWN TO REMAIN SHALL BE REMOVED WITHOUT WRITTEN APPROVAL FROM THE OWNER. ONLY "GRADING BY HAND" IS PERMITTED WITHIN THE CANOPY LINE OF TREES THAT ARE TO REMAIN.
2. THE CONTRACTOR IS TO PREPARE THE SITE PRIOR TO BEGINNING ACTUAL CONSTRUCTION IN ACCORDANCE WITH THE SOILS TESTING REPORT. COPIES OF THE SOILS REPORT ARE AVAILABLE THROUGH THE OWNER OR THE SOILS TESTING COMPANY. QUESTIONS REGARDING SITE PREPARATION REQUIREMENTS DESCRIBED IN THE SOILS REPORT ARE TO BE DIRECTED TO THE SOILS TESTING COMPANY.
3. CONTRACTOR SHALL CLEAR AND GRUB ONLY THOSE PORTIONS OF THE SITE NECESSARY FOR CONSTRUCTION. DISTURBED AREAS WILL BE SEEDED, MULCHED, OR PLANTED WITH OTHER APPROVED LANDSCAPE MATERIAL AS SOON AS GRADING IS COMPLETED AND/OR IS PRACTICABLE. AREAS ANTICIPATED BEING LEFT DISTURBED OR DENUDED FOR LONGER THAN 21 DAYS WILL BE STABILIZED WITH TEMPORARY STABILIZATION WITHIN 14 DAYS OF DISTURBANCE. NO AREAS SHALL BE LEFT OR DISTURBED OR DENUDED FOR LONGER THAN 21 DAYS.
4. THE TOP 4" TO 6" OF GROUND REMOVED DURING CLEARING AND GRUBBING SHALL BE STOCKPILED AT A SITE DESIGNATED BY THE OWNER TO BE USED FOR LANDSCAPING PURPOSES, UNLESS OTHERWISE DIRECTED BY THE OWNER. SILT FENCE SHALL BE PLACED ALONG THE STOCKPILE PERIMETER FOR EROSION CONTROL.
5. ALL CONSTRUCTION DEBRIS AND OTHER WASTE MATERIAL SHALL BE DISPOSED OF OFF-SITE IN ACCORDANCE WITH APPLICABLE REGULATIONS.
6. CONTRACTOR TO OBTAIN ALL NECESSARY PERMITS FOR REMOVING ANY EXISTING STRUCTURES.
7. CONTRACTOR TO OBTAIN SITE CLEARING & TREE REMOVAL PERMIT PRIOR TO INSTALLATION OF ANY UNDERGROUND UTILITIES AND CLEARING THE SITE.
8. PROTECTION FOR EXISTING STORM SEWER SYSTEMS: DURING CONSTRUCTION, ALL STORM SEWER INLETS IN THE VICINITY OF THE PROJECT SHALL BE PROTECTED BY SEDIMENT TRAPS SUCH AS SECURED SOD, STONE, ETC., WHICH SHALL BE MAINTAINED AND MODIFIED AS REQUIRED BY CONSTRUCTION PROGRESS.
9. ALL DISTURBED AREAS WHICH ARE NOT TO BE SODDED ARE TO BE SEEDED, MULCHED AND WATERED TO FDOT STANDARDS AND MAINTAINED UNTIL A SATISFACTORY STAND OF GRASS ACCEPTABLE TO THE REGULATORY AGENCY AND ENGINEER HAVE BEEN OBTAINED. ANY WASHOUTS, REGRADING, RESEEDING, AND GRASSING WORK, AND OTHER EROSION WORK REQUIRED, WILL BE PERFORMED BY THE CONTRACTOR UNTIL THE SYSTEM IS ACCEPTED FOR MAINTENANCE BY THE REGULATORY AGENCY AND THE ENGINEER.
10. CONTRACTOR IS TO PROVIDE EROSION CONTROL/SEDIMENTATION BARRIER (TURBIDITY BARRIER OR STAKED SILT FENCE) TO PREVENT SILTATION OF ADJACENT PROPERTY, STREETS, STORM SEWERS, WATERWAYS, AND EXISTING WETLANDS. IN ADDITION, CONTRACTOR SHALL PLACE STRAW, MULCH, OR OTHER SUITABLE MATERIAL ON GROUND IN AREAS WHERE CONSTRUCTION RELATED TRAFFIC IS TO ENTER AND EXIT THE SITE. IF, IN THE OPINION OF THE ENGINEER AND/OR LOCAL AUTHORITIES, EXCESSIVE QUANTITIES OF EARTH ARE TRANSPORTED OFF-SITE EITHER BY NATURAL DRAINAGE OR BY VEHICULAR TRAFFIC, THE CONTRACTOR IS TO RECOVER SAID EARTH TO THE SATISFACTION OF THE ENGINEER AND/OR AUTHORITIES.
11. IF WIND EROSION BECOMES SIGNIFICANT DURING CONSTRUCTION, THE CONTRACTOR SHALL STABILIZE THE AFFECTED AREA USING SPRINKLING, IRRIGATION, OR OTHER ACCEPTABLE METHODS.
12. THERE SHALL BE NO DISCHARGE (I.E. PUMPING, SHEET FLOW, SWALE, DITCH, ETC.) INTO AN EXISTING LAKE SYSTEM, WETLAND, OR RIVER, WITHOUT THE USE OF SETTLING PONDS. IF THE CONTRACTOR DESIRES TO DISCHARGE INTO THE EXISTING LAKE SYSTEM OR RIVER, A SETTLING POND PLAN MUST BE SUBMITTED AND APPROVED BY THE ENGINEER AND LOCAL REGULATORY AGENCY PRIOR TO CONSTRUCTION.
13. ONLY THAT PORTION OF THE RIGHT-OF-WAY NECESSARY FOR PAVEMENT AND DRAINAGE FACILITIES SHALL BE CLEARED AND GRUBBED ACCORDING TO THE REQUIREMENTS OF THE FLORIDA DEPARTMENT OF TRANSPORTATION STANDARD SPECIFICATIONS FOR ROAD AND BRIDGE CONSTRUCTION, LATEST EDITION. FLORIDA NATIVE TREES OF 4 INCH CALIPER OR GREATER TRUNK DIAMETER SHALL BE SAVED WHEREVER THEY WILL NOT CONSTITUTE A SAFETY HAZARD, NOR BE DEFACED BY UTILITY CONSTRUCTION, OR DAMAGED BY THE REQUIRED STREET CONSTRUCTION. THE DIRECTOR OF PUBLIC WORKS SHALL REQUIRE THAT THE TREES TO BE SAVED, DUE TO THESE REQUIREMENTS, BE PROMINENTLY MARKED AND BARRICADED BEFORE THE BEGINNING OF CONSTRUCTION.
14. ALL FINISHED EARTH SURFACES WITHIN PUBLIC RIGHT-OF-WAY SHALL BE GRASSED ACCORDING TO THE FOLLOWING CRITERIA TO PREVENT EROSION AND TO IMPROVE THE APPEARANCE OF THE COMPLETED WORK.
A. ALL FINISHED SURFACES WITHIN THE RIGHT-OF-WAY SHALL BE SODDED.
B. ALL SWALES AND RETENTION/DETENTION AREAS SHALL BE SODDED (EXCEPT WHERE NOTED).
C . ALL SWALE DITCHES, WITH AN AVERAGE VELOCITY EXCEEDING 2 FEET PER SECOND, SHALL BE SODDED. IN NO CASE SHALL SWALE VELOCITIES EXCEED 6 FEET PER SECOND FOR DITCH SLOPES LESS THAN 5% AND 4 FEET PER SECOND FOR DITCH SLOPES GREATER THAN 5%.

PAVING AND GRADING NOTES

1. ALL DELETERIOUS MATERIAL (I.E., MUCK, PEAT, BURIED DEBRIS) IS TO BE EXCAVATED IN ACCORDANCE WITH THESES PLANS OR AS DIRECTED BY THE OWNER'S ENGINEER OR OWNER'S SOIL TESTING COMPANY. DELETERIOUS MATERIAL IS TO BE STOCKPILED OR REMOVED FROM THE SITE AS DIRECTED BY THE OWNER. EXCAVATED AREAS ARE TO BE BACKFILLED WITH APPROVED MATERIALS AND COMPACTED AS SHOWN ON THESE PLANS.
2. THE CONTRACTOR SHALL BE RESPONSIBLE FOR PROTECTING EXCAVATIONS AGAINST COLLAPSE AND SHALL PROVIDE BRACING, SHEETING OR SHORING AS NECESSARY. TRENCHES SHALL BE KEPT DRY WHILE PIPE AND APPURTENANCES ARE BEING PLACED. DEWATERING SHALL BE USED AS REQUIRED, AND PERMITTED THROUGH LOCAL GOVERNMENTAL AGENCIES AND WATER MANAGEMENT DISTRICT PER CURRENT REGULATIONS.
3. PROPOSED SPOT ELEVATIONS REPRESENT FINISHED PAVEMENT OR GROUND SURFACE GRADE UNLESS OTHERWISE NOTED ON DRAWINGS.
4. REFER TO THE LATEST EDITION OF FDOT "ROADWAY AND TRAFFIC DESIGN STANDARDS" FOR DETAILS AND SPECIFICATIONS OF ALL FDOT TYPE CURBING AND GUTTERS CALLED FOR ON THESE PLANS.
5. IT MAY BE NECESSARY TO FIELD ADJUST PAVEMENT ELEVATIONS TO PRESERVE THE ROOT SYSTEMS OF TREES SHOWN TO BE SAVED. CONTRACTOR TO COORDINATE WITH OWNER'S ENGINEER PRIOR TO ANY ELEVATION CHANGES.
6. PRIOR TO CONSTRUCTION OF CONCRETE PAVEMENT, THE CONTRACTOR IS TO SUBMIT A PROPOSED JOINTING PATTERN TO THE OWNER'S ENGINEER FOR REVIEW.
7. CONTRACTOR TO PROVIDE A 1/2" BITUMINOUS EXPANSION JOINT MATERIAL WITH SEALER AT ABUTMENT OF CONCRETE AND ANY STRUCTURE.
8. ALL PAVEMENT MARKINGS SHALL BE MADE WITH PERMANENT THERMOPLASTIC AND SHALL CONFORM TO FDOT STANDARD INDEX NO. 17346, SHEETS 1 - 7. ON-SITE STRIPE COLOR SHALL BE WHITE EXCEPT AS SHOWN ON THE ENGINEERING PLANS.
9. CONTRACTOR SHALL TRIM, TACK, AND MATCH EXISTING PAVEMENT AT LOCATIONS WHERE NEW PAVEMENT MEETS EXISTING PAVEMENT.
10. CONTRACTOR SHALL INSTALL STORM PIPING AND CULVERTS IN ACCORDANCE WITH FDOT INDEX 205 AND PLACE EXTRA BASE MATERIAL WHEN THE DISTANCE BETWEEN THE PAVEMENT ELEVATION AND THE TOP OF THE PIPE OR BELL IS LESS THAN TWELVE (12) INCHES.
11. THE CONTRACTOR IS RESPONSIBLE FOR COORDINATING APPLICABLE TESTING WITH THE SOILS ENGINEER. TESTS WILL BE REQUIRED PURSUANT TO THE TESTING SCHEDULE REQUIRED BY APPLICABLE REGULATORY AGENCIES AND AS MAY BE FOUND IN THE ENGINEERING CONSTRUCTION DRAWINGS. CONTRACTOR TO VERIFY ALL TESTING WITH THE OWNER PRIOR TO COMMENCING CONSTRUCTION. UPON COMPLETION OF THE WORK, THE SOILS ENGINEER MUST SUBMIT TO THE OWNER'S ENGINEER.

SURVEY NOTES

1. ELEVATIONS BASED ON NGVD 1929 VERTICAL DATUM

DIVISION 2: TECHNICAL SPECIFICATIONS

SEC. 02.200. GENERAL: THE SPECIFICATIONS AND DRAWINGS ARE AN INTEGRATED PART OF THE CONTRACT DOCUMENTS AND AS SUCH WILL NOT STAND ALONE IF USED INDEPENDENTLY AS INDIVIDUAL PARTS, PARAGRAPHS, OR DRAWING SHEETS. THE DRAWINGS AND SPECIFICATIONS ESTABLISH MINIMUM STANDARDS OF QUALITY FOR A PROJECT. THEY DO NOT PURPORT TO COVER ALL DETAILS ENTERING INTO ITS DESIGN AND CONSTRUCTION OR OF ALL MATERIAL AND EQUIPMENT REQUIRED TO COMPLETE THE WORK.

SEC. 02.201. MAINTENANCE OF TRAFFIC:
A. CONTROL DEVICES: THE CONTRACTOR SHALL BE REQUIRED TO KEEP THE ENTIRE WORK SITE IN FULL COMPLIANCE WITH THE FLORIDA DEPARTMENT OF TRANSPORTATION ROADWAY AND TRAFFIC DESIGN STANDARDS, CURRENT EDITION AND THE USDOT, FHWA MANUAL ON UNIFORM TRAFFIC CONTROL DEVICES, CURRENT EDITION.
B. DETOURS: DETOURS SHALL REQUIRE APPROVAL BY THE COUNTY ENGINEER. ANY DETOURS APPROVED AS A PART OF THE TRAFFIC CIRCULATION PLAN, SHALL BE REQUIRED TO BE PROPERLY POSTED AND A MINIMUM OF 48-HOURS ADVANCE NOTICE SHALL BE GIVEN TO THE COUNTY ENGINEER'S OFFICE, LAW ENFORCEMENT AGENCIES, FIRE DEPARTMENT, SCHOOL BOARD AND EMERGENCY SERVICES. ADVANCE NOTICE SHALL ALSO BE PLACED AT THE LAST INTERSECTION BEFORE THE DETOUR.
C. DRIVEWAYS KEPT OPEN: NO BUSINESS WILL HAVE VEHICULAR ACCESS TOTALLY BLOCKED AT ANY TIME. DRIVEWAY ACCESS TO PROPERTY WILL NOT BE BLOCKED FOR MORE THAN 8 HOURS ON ANY DAY PROPERTY OWNERS WILL BE NOTIFIED IN WRITTEN FORM BY THE CONTRACTOR 24 HOURS PRIOR TO THE BLOCKING OF ANY DRIVEWAY, BUSINESS, OR PROPERTY ACCESS. BLOCKING OF DRIVEWAYS WILL REQUIRE ADVANCE APPROVAL BY THE COUNTY ENGINEER.
D. MAINTENANCE OF TRAFFIC VIOLATIONS: THE COUNTY WILL REPORT ANY KNOWN VIOLATION OF THE REQUIRED MAINTENANCE OF TRAFFIC TO THE OWNER, PROJECT ENGINEER, OR CONTRACTOR. THE CONTRACTOR WILL HAVE 4 HOURS OF REGULARLY SCHEDULED WORK TIME TO BRING THE SITE INTO FULL COMPLIANCE. IF THIS IS NOT DONE, THE COUNTY WILL HAVE THE OPTION TO TAKE ANY CORRECTIVE MEASURES IT FEELS NECESSARY AND TO BILL THE OWNER FOR THE COST OF THESE MEASURES.
E. TRAFFIC CONTROL PLAN APPROVAL: PRIOR TO THE COMMENCEMENT OF WORK AT THE JOB SITE, THE PROJECT ENGINEER SHALL RECEIVE APPROVAL OF HIS TRAFFIC CONTROL PLAN FROM THE COUNTY ENGINEER ACCESS FOR LOCAL TRAFFIC SHALL BE MAINTAINED THROUGHOUT THE CONSTRUCTION PERIOD OF THE PROJECT.

SEC. 02.202. DRIVEWAY INGRESS AND EGRESS MAINTENANCE: THIS SPECIFICATION SHALL ONLY APPLY WHERE RESIDENCES, BUSINESSES, AND OTHER TYPES OF PROPERTY FRONT ON THE ROAD TO BE CONSTRUCTED OR RECONSTRUCTED, AND DRIVEWAY CONNECTIONS ARE TO BE DISTURBED.
A. CONTRACTOR WILL BE REQUIRED TO PLACE COMMERCIAL BASE MATERIAL IN DRIVEWAYS AND/OR ACCESS POINTS AFFECTED BY THE PROJECT, WHERE CONSIDERED NECESSARY BY THE PROJECT ENGINEER TO PROVIDE SAFE, STABLE AND REASONABLE ACCESS TO RESIDENCES, BUSINESSES, AND PROPERTY.
B. THE MATERIALS TO BE USED FOR DRIVEWAY MAINTENANCE SHALL BE LIMEROCK, STONE OR OYSTER SHELL. THE GRADE AND QUALITY OF THE MATERIAL SHALL BE THAT OFFERED FOR COMMERCIAL SUPPLY IN THE AREA. COMMERCIAL MATERIALS USED IN LOCATIONS WHICH HAVE INADEQUATE DRAINAGE OR ARE PRONE TO BE WET, SHALL BE OF A STABLE CHARACTER, UNAFFECTED BY WET CONDITIONS.
C. THE MATERIAL SHALL BE PLACED IN THE DRIVEWAY AS DIRECTED BY THE PROJECT ENGINEER. THE MATERIAL SHALL BE LEVELED, MANIPULATED, COMPACTED AND MAINTAINED, TO THE EXTENT APPROPRIATE FOR THE INTENDED USE OF THE PARTICULAR DRIVEWAY.
D. AS PERMANENT DRIVEWAY CONSTRUCTION IS ACCOMPLISHED AT A PARTICULAR LOCATION, PREVIOUSLY PLACED COMMERCIAL MATERIALS WHICH ARE SUITABLE FOR REUSE MAY BE SALVAGED AND REUSED ON OTHER DRIVEWAYS AS DIRECTED.

SEC. 02.203. CLEARING AND GRUBBING:
A. CLEARING AND GRUBBING SHALL CONSIST OF THE COMPLETE REMOVAL AND DISPOSAL OF ALL TIMBER, BRUSH, VEGETATION, STUMPS, ROOTS, BOULDERS, PAVEMENT, RUBBISH AND DEBRIS AND ALL OTHER MATERIALS AND OBSTRUCTIONS RESTING ON OR PROTRUDING THROUGH THE SURFACE OF THE EXISTING GROUND AND THE SURFACE OF WORK AREAS. MATERIAL RESULTING FROM CLEARING AND GRUBBING SHALL BE DISPOSED OF BY THE CONTRACTOR IN A PROPER PLACE.
B. AS AN EXCEPTION TO THE ABOVE PROVISIONS, WHERE SO DIRECTED BY THE PROJECT ENGINEER AND APPROVED BY THE COUNTY ENGINEER, DESIRABLE TREES WITHIN THE ROADWAY SHALL BE TRIMMED, PROTECTED AND LEFT STANDING. BRANCHES OF TREES EXTENDING OVER THE AREA OCCUPIED BY THE ROADWAY SHALL BE TRIMMED AS DIRECTED, TO GIVE A CLEAR HEIGHT OF 16 FEET ABOVE THE ROADWAY.
C. WITHIN THE RIGHT-OF-WAY AND WITHIN ALL SWALES AND DITCHES, ALL STUMPS, ROOTS, ETC., PROTRUDING THROUGH OR APPEARING ON THE SURFACE OF THE COMPLETED EXCAVATION SHALL BE REMOVED OR CUT OFF BELOW THE FINISHED EXCAVATION SURFACE. WITHIN ALL OTHER AREAS WHERE CLEARING AND GRUBBING IS TO BE DONE, ROOTS AND OTHER DEBRIS, PROJECTING THROUGH OR APPEARING ON THE SURFACE OF THE ORIGINAL GROUND, SHALL BE REMOVED TO A DEPTH OF ONE FOOT BELOW THE BOTTOM OF THE SUBGRADE.
D. BURNING OF SUCH MATERIALS WILL ONLY BE ALLOWED WHEN A PROPER BURN PERMIT CAN BE OBTAINED AND ALL SUCH BURNING SHALL BE SUBJECT TO APPLICABLE LAWS, ORDINANCES AND REGULATIONS AND SHALL BE DONE AT LOCATIONS WHERE TREES AND SHRUBS ADJACENT TO THE CLEARED AREA WILL NOT BE HARMED. BURNING MAY BE REQUIRED TO CEASE IMMEDIATELY IF COMPLAINTS ARE RECEIVED BY THE PROJECT ENGINEER OR THE COUNTY ENGINEER.

SEC. 02.204. EARTHWORK: ALL MATERIALS SHALL BE IN ACCORDANCE WITH THE FLORIDA DEPARTMENT OF TRANSPORTATION STANDARD SPECIFICATIONS FOR ROAD AND BRIDGE CONSTRUCTION, CURRENT EDITION, AND ALL ACTIVITIES PERFORMED IN ACCORDANCE WITH THE STATE OF FLORIDA DEPARTMENT OF TRANSPORTATION DESIGN STANDARDS FOR DESIGN, CONSTRUCTION, MAINTENANCE AND UTILITY OPERATIONS ON THE STATE HIGHWAY SYSTEM, CURRENT EDITION.

SEC. 02.205. RIGID DITCH CHECKS: ALL MATERIALS SHALL BE IN ACCORDANCE WITH THE FLORIDA DEPARTMENT OF TRANSPORTATION STANDARD SPECIFICATIONS FOR ROAD AND BRIDGE CONSTRUCTION, CURRENT EDITION, AND CONSTRUCTED IN ACCORDANCE WITH THE STATE OF FLORIDA DEPARTMENT OF TRANSPORTATION DESIGN STANDARDS FOR DESIGN, CONSTRUCTION, MAINTENANCE AND UTILITY OPERATIONS ON THE STATE HIGHWAY SYSTEM, CURRENT EDITION.

SEC. 02.206. RIPRAP (SAND-CEMENT): ALL MATERIALS SHALL BE IN ACCORDANCE WITH THE FLORIDA DEPARTMENT OF TRANSPORTATION STANDARD SPECIFICATIONS FOR ROAD AND BRIDGE CONSTRUCTION, CURRENT EDITION, AND CONSTRUCTED IN ACCORDANCE WITH THE STATE OF FLORIDA DEPARTMENT OF TRANSPORTATION DESIGN STANDARDS FOR DESIGN, CONSTRUCTION, MAINTENANCE AND UTILITY OPERATIONS ON THE STATE HIGHWAY SYSTEM, CURRENT EDITION.

SEC. 02.207. INSPECTIONS, FIELD MEASUREMENTS AND LABORATORY TESTS:
A. GENERAL: THE CONTRACTOR SHALL NOTIFY THE PROJECT ENGINEER IN ADVANCE OF THE TIME AND DATE WHEN ANY TESTS CAN BE CONDUCTED, SO THAT THE PROJECT ENGINEER MAY SCHEDULE THE REQUIRED TESTING WITH THE INDEPENDENT TESTING LABORATORY. THE TEST SAMPLES SHALL BE TAKEN BY EITHER AN EMPLOYEE OF THE INDEPENDENT TESTING LABORATORY OR THE PROJECT ENGINEER OR HIS REPRESENTATIVE. IN NO CASE SHALL THE CONTRACTOR TAKE THE SAMPLES OR TRANSPORT THE SAMPLES TO THE LABORATORY. THE PROJECT ENGINEER SHALL INSPECT ALL CONSTRUCTION AND IS AUTHORIZED TO CALL TO THE ATTENTION OF THE CONTRACTOR ANY FAILURE OF WORK OR MATERIALS TO CONFORM WITH THE PLANS AND SPECIFICATIONS. THE FOLLOWING LABORATORY TESTS OR FIELD MEASUREMENTS AND FREQUENCY OF SUCH SHALL BE MADE IN ACCORDANCE WITH THE PROJECT ENGINEER'S DIRECTION BY THE INDEPENDENT TESTING LABORATORY, AT THE PROJECT EXPENSE, AND IN KEEPING WITH GOOD ENGINEERING PRACTICES. THE CONTRACTOR IS REQUIRED TO CONDUCT AND/OR STOP HIS WORK SO THAT THE APPROPRIATE TESTS, SAMPLES AND MEASUREMENTS CAN BE MADE INA SAFE AND PROPER MANNER. THE CONTRACTOR SHALL RECEIVE COPIES OF THE TEST REPORTS FROM THE PROJECT ENGINEER. THE INDEPENDENT TESTING LABORATORY SHALL MAIL OR HAND DELIVER COPIES OF ALL TESTS DIRECTLY TO THE OFFICE OF THE COUNTY ENGINEER.
B. SUB-BASE AND SHOULDER: SUB-BASE AND SHOULDER TESTS SHALL BE MADE AS FOLLOWS:
1. PROCTOR: ONE PER MILE UNLESS THE NATIVE SOILS ARE SIGNIFICANTLY DIFFERENT. IN THAT CASE, ONE PER EVERY MAJOR SOILS TYPE. SAMPLE SHALL BE TAKEN FROM THE ROADWAY AFTER SCARIFYING AND MIXING.
2. WIDTH: EVERY 200 FEET AFTER SUB-BASE AND SHOULDERS HAVE BEEN MIXED, AND COMPACTED AND PRIOR TO ANY "BOXING OUT" OPERATION.
3. DEPTH:
A. SUB-BASE: EVERY 200 FEET WITHIN THE AREA TO BE COVERED BY THE BASE MATERIAL AFTER FINAL GRADING AND COMPACTION; JUST PRIOR TO THE PLACEMENT OF THE BASE MATERIAL. TESTS WILL BE CONDUCTED IN A ZIG-ZAG PATTERN COVERING THE ENTIRE AREA DESCRIBED ABOVE.
B. SHOULDER: EVERY 400 FEET, EACH SIDE, WITHIN THE SHOULDER AREAS PRIOR TO ANY "BOXING OUT" OPERATION, BUT AFTER MIXING AND COMPACTION.
1. FLORIDA BEARING VALUE (FBV): AT 200 FOOT INTERVALS TAKE THREE SAMPLES. SAMPLES SHALL BE TAKEN FROM ONE FOOT IN FROM EACH OUTSIDE EDGE OF THE SHOULDER AND ONE FROM WITHIN THE TRAFFIC LANE (AREAS). COMBINE THE TOP 1/2 OF THREE CONSECUTIVE SAMPLES INTO ONE COMPOSITE SAMPLE AND COMBINE THE BOTTOM 1/2 OF THE SAME THREE SAMPLES INTO ANOTHER SINGLE COMPOSITE SAMPLE MINIMUM ACCEPTABLE FBV IS 60 PSI. (NO TOLERANCE ACCEPTABLE.)
2. DENSITY:
A. SUB-BASE: EVERY 200 FEET, IN A ZIG-ZAG PATTERN, AND JUST PRIOR TO THE PLACEMENT OF THE BASE. EVERY OTHER TEST WILL BE MADE AT THE PROPOSED EDGE OF THE PAVEMENT. MINIMUM ACCEPTABLE VALUE: 95% DENSITY AS PER AASHTO T-180.
B. SHOULDER: EVERY 400 FEET, ONE TO TWO FEET IN FROM THE OUTSIDE EDGE OF THE SHOULDER, ON EACH SIDE OF THE ROAD. DENSITY SAMPLES SHALL BE TAKEN JUST PRIOR TO THE "BOXING OUT" OPERATION FOR THE BASE. MINIMUM ACCEPTABLE VALUE: 95% DENSITY AS PER AASHTO T-180.
3. FAILURES: ANY FAILURE REVEALED BY THE REQUIRED FIELD MEASUREMENTS AND LABORATORY TESTS REQUIRING ADDITIONAL MATERIAL SHALL REQUIRE THE CONTRACTOR TO SCARIFY THE EXISTING MATERIAL, PLACE THE ADDITIONAL MATERIAL AND THEN RE-SHAPE AND RE-COMPACT THE SUB-BASE FOR A MINIMUM DISTANCE OF 50 FEET EACH SIDE OF THE FAILURE. DEFICIENT DENSITY WILL REQUIRE ADDITIONAL COMPACTION A MINIMUM OF 50 FEET EACH SIDE OF THE FAILURE.
4. PLACEMENT OF THE BASE: THE BASE SHALL BE PLACED ON THE SUB-BASE ONLY AFTER COPIES OF THE RESULTS OF THE REQUIRED FIELD MEASUREMENTS AND LABORATORY TESTS FOR THE SUB-BASE HAVE BEEN RECEIVED AND APPROVED BY THE PROJECT ENGINEER.
C. BASE (LIMEROCK OR SHELLROCK): TESTS FOR THE BASE SHALL BE MADE AS FOLLOWS:
1. MATERIAL: FOR MATERIAL WHOSE SOURCE IS AN FDOT APPROVED AND CERTIFIED MINING PIT, SUBMITTAL OF COPIES OF THE PIT CERTIFICATION SHALL BE REQUIRED; FOR MATERIAL FROM ANY OTHER SOURCE, SUBMITTAL OF TEST RESULTS FROM AN APPROVED TESTING LABORATORY IN ACCORDANCE WITH A BASE MATERIAL TESTING PLAN, APPROVED IN ADVANCE BY THE COUNTY ENGINEER, SHALL BE REQUIRED.
2. PROCTOR: ONE PER MILE UNLESS THE BASE MATERIAL CHANGES IN QUALITY; SAMPLE MUST BE TAKEN FROM AN ON-SITE STOCKPILE.
3. WIDTH, DEPTH, CROWN: EVERY 200 FEET AS SHOWN ON PLANS. SEE TYPICAL SECTIONS IN SECTION SIX: ILLUSTRATIONS FOR MINIMUM REQUIREMENTS.
4. DENSITY: EVERY 200 FEET IN A ZIG-ZAG PATTERN WITHIN THE AREAS TO BE COVERED BY PAVEMENT. MINIMUM ACCEPTABLE VALUE: 95% DENSITY AS PER AASHTO T-180.
5. BASE FAILURES: ANY FAILURES OF THE BASE REVEALED BY THE REQUIRED FIELD MEASUREMENT AND LABORATORY TESTS REQUIRING ADDITIONAL BASE MATERIAL SHALL REQUIRE THE CONTRACTOR TO SCARIFY THE EXISTING BASE MATERIAL, PLACE THE ADDITIONAL MATERIAL AND THEN RE-SHAPE AND RE-COMPACT THE BASE FOR A MINIMUM DISTANCE OF 50 FEET EACH SIDE OF THE FAILURE. DEFICIENT DENSITY OF THE BASE WILL REQUIRE ADDITIONAL COMPACTION A MINIMUM OF 50 FEET EACH SIDE OF FAILURE.
6. BASE PRIMING: ONCE THE BASE IS APPROVED BY THE TESTING LABORATORY, THE CONTRACTOR SHALL AS SOON AS POSSIBLE PRIME AND SAND-SEAL THE BASE. APPROVAL MUST BE OBTAINED FROM THE PROJECT ENGINEER. THIS APPROVAL CAN BE GRANTED ONLY AFTER THE PROJECT ENGINEER RECEIVES THE RESULTS OF THE FIELD MEASUREMENTS AND LABORATORY TESTS DIRECTLY FROM THE INDEPENDENT TESTING LABORATORY.
D. SHOULDER: THE FINISHED SHOULDER AREA IS INTENDED TO BE COMPACTED TO A SMOOTH, FIRM CONDITION THAT CAN ACCOMMODATE VEHICLES WITHOUT RUTS BEING CREATED. IF IN THE OPINION OF THE PROJECT ENGINEER, EXCESS UNSUITABLE MATERIAL HAS BEEN INCORPORATED INTO THE TOP 6 INCHES OF THE SHOULDER, HE MAY REQUIRE THAT STABILIZING MATERIAL BE ADDED AND MIXED TO PRODUCE A FBV OF 60 PSI, AND BE COMPACTED TO A MINIMUM DENSITY OF 95% AS PER AASHTO T-180.
E. TRENCHES FOR UNDERGROUND PIPES OR STRUCTURES: THE FOLLOWING TESTS SHALL BE MADE:
1. PROCTOR: ONE PER MILE OF TRENCH UNLESS THE MATERIAL CHANGES; IF MATERIAL CHANGES ONE PER EACH DIFFERENT SOIL OR MATERIAL ALLOWED FOR BACKFILL.
2. DENSITY: EVERY 200 FEET OUTSIDE AREAS OF VEHICULAR TRAFFIC AND EVERY 10 FEET WHERE THE TRENCH CROSSES AN AREA OF VEHICULAR TRAVEL, INCLUDING DRIVEWAYS. FREQUENCY OF TESTING WILL BE THE SAME FOR EACH LIFT. EACH COMPACTED ONE FOOT DEPTH OF BACKFILL IS A LIFT. TESTING OF DENSITY WILL START WHEN BACKFILL IS 12 INCHES OVER THE TOP OF THE PIPE. TESTS WILL BE DONE WITHIN THE WIDTH OF THE TRENCH AS INDICATED BY THE PROJECT ENGINEER.
3. DENSITY REQUIREMENTS: THE DENSITY REQUIREMENTS ARE THAT:
A. IN AREAS OF PROPOSED OR EXISTING PAVEMENT OR VEHICULAR TRAFFIC ALL BACKFILL, SUB-BASE, AND BASE MATERIAL SHALL BE COMPACTED TO 98% OF MAXIMUM DENSITY AS PER AASHTO T-180; AND
B. IN OTHER AREAS NOT UNDER PROPOSED OR EXISTING PAVING OR IN AREAS NOT SUBJECT TO VEHICULAR TRAFFIC, THE BACKFILL SHALL BE COMPACTED TO 90% DENSITY AS PER AASHTO T-180.

SEC. 02.208. TOLERANCES: THE REQUIRED THICKNESSES AND WIDTHS SHALL BE THE ABSOLUTE MINIMUM ALLOWABLE. NO ALLOWANCE WILL BE MADE FOR FAILURE IN A WIDTH OR DEPTH DIMENSION. FLORIDA BEARING VALUE AND DENSITY REQUIREMENTS SHOWN ON THE PLANS AND SPECIFICATIONS ARE THE ABSOLUTE MINIMUM ALLOWABLE AND NO VALUES LESS THAN THOSE SPECIFIED WILL BE ACCEPTED. GRADES ON ROADWAY CENTERLINE AND DITCH INVERTS SHALL BE PLUS OR MINUS 0.05 OF A FOOT FROM PLAN DIMENSIONS.

SEC. 02.209. STABILIZED SUBBASE AND SHOULDERS: ALL MATERIALS SHALL BE IN ACCORDANCE WITH THE FLORIDA DEPARTMENT OF TRANSPORTATION STANDARD SPECIFICATIONS FOR ROAD AND BRIDGE CONSTRUCTION, CURRENT EDITION, AND CONSTRUCTED IN ACCORDANCE WITH THE STATE OF FLORIDA DEPARTMENT OF TRANSPORTATION DESIGN STANDARDS FOR DESIGN, CONSTRUCTION, MAINTENANCE AND UTILITY OPERATIONS ON THE STATE HIGHWAY SYSTEM, CURRENT EDITION.

SEC. 02.210. LIMEROCK OR SHELLROCK BASE: ALL MATERIALS SHALL BE IN ACCORDANCE WITH THE FLORIDA DEPARTMENT OF TRANSPORTATION STANDARD SPECIFICATIONS FOR ROAD AND BRIDGE CONSTRUCTION, CURRENT EDITION, AND CONSTRUCTED IN ACCORDANCE WITH THE STATE OF FLORIDA DEPARTMENT OF TRANSPORTATION DESIGN STANDARDS FOR DESIGN, CONSTRUCTION, MAINTENANCE AND UTILITY OPERATIONS ON THE STATE HIGHWAY SYSTEM, CURRENT EDITION.

SEC. 02.211. ASPHALT: ALL MATERIALS SHALL BE IN ACCORDANCE WITH THE FLORIDA DEPARTMENT OF TRANSPORTATION STANDARD SPECIFICATIONS FOR ROAD AND BRIDGE CONSTRUCTION, CURRENT EDITION, TYPE S ASPHALT CONCRETE SHALL BE IN ACCORDANCE WITH THE FLORIDA DEPARTMENT OF, TRANSPORTATION STANDARD SPECIFICATIONS FOR ROAD AND BRIDGE CONSTRUCTION, 2000 EDITION, AND CONSTRUCTED IN ACCORDANCE WITH THE STATE OF FLORIDA DEPARTMENT OF TRANSPORTATION DESIGN STANDARDS FOR DESIGN, CONSTRUCTION, MAINTENANCE AND UTILITY OPERATIONS ON THE STATE HIGHWAY SYSTEM, CURRENT EDITION.

SEC. 02.212. PAVEMENT MARKING: ALL MATERIALS SHALL BE IN ACCORDANCE WITH THE FLORIDA DEPARTMENT OF TRANSPORTATION STANDARD SPECIFICATIONS FOR ROAD AND BRIDGE CONSTRUCTION, CURRENT EDITION, AND CONSTRUCTED IN ACCORDANCE WITH THE STATE OF FLORIDA DEPARTMENT OF TRANSPORTATION DESIGN STANDARDS FOR DESIGN, CONSTRUCTION, MAINTENANCE AND UTILITY OPERATIONS ON THE STATE HIGHWAY SYSTEM, CURRENT EDITION.

SEC. 02.213. SIGNS: ALL MATERIALS AND INSTALLATION METHODS SHALL BE IN ACCORDANCE WITH THE FLORIDA DEPARTMENT OF TRANSPORTATION STANDARD SPECIFICATIONS FOR ROAD AND BRIDGE CONSTRUCTION, CURRENT EDITION, USDOT, FHWA MANUAL ON UNIFORM TRAFFIC CONTROL DEVICES, CURRENT EDITION, AND STATE OF FLORIDA DEPARTMENT OF TRANSPORTATION DESIGN STANDARDS FOR DESIGN, CONSTRUCTION, MAINTENANCE AND UTILITY OPERATIONS ON THE STATE HIGHWAY SYSTEM, CURRENT EDITION.

SEC. 02.214. CULVERTS/STORM SEWERS: ALL MATERIALS SHALL BE IN ACCORDANCE WITH THE FLORIDA DEPARTMENT OF TRANSPORTATION STANDARD SPECIFICATIONS FOR ROAD AND BRIDGE CONSTRUCTION, CURRENT EDITION, AND CONSTRUCTED IN ACCORDANCE WITH THE STATE OF FLORIDA DEPARTMENT OF TRANSPORTATION DESIGN STANDARDS FOR DESIGN, CONSTRUCTION, MAINTENANCE AND UTILITY OPERATIONS ON THE STATE HIGHWAY SYSTEM, CURRENT EDITION.

SEC. 02.215. GRASSING: ALL MATERIALS AND INSTALLATION PROCEDURES SHALL BE IN ACCORDANCE WITH THE FLORIDA DEPARTMENT OF TRANSPORTATION STANDARD SPECIFICATIONS FOR ROAD AND BRIDGE CONSTRUCTION, CURRENT EDITION, AND THE STATE OF FLORIDA DEPARTMENT OF TRANSPORTATION DESIGN STANDARDS FOR DESIGN, CONSTRUCTION, MAINTENANCE AND UTILITY OPERATIONS ON THE STATE HIGHWAY SYSTEM, CURRENT EDITION. THE AREAS ON WHICH THE SOD IS TO BE PLACED SHALL CONTAIN SUFFICIENT MOISTURE FOR OPTIMUM RESULTS AFTER BEING PLACED. THE SOD SHALL BE WATERED AND KEPT IN A MOIST CONDITION FOR NO LESS THAN TWO WEEKS (MINIMUM) OR UNTIL THE ENTIRE PROJECT IS ACCEPTED BY THE PROJECT ENGINEER AND THE COUNTY ENGINEER THE MOISTENED CONDITION SHALL EXTEND AT LEAST TO THE FULL DEPTH OF THE ROOTING ZONE. WATER SHALL NOT BE APPLIED, HOWEVER, WHEN THERE IS DANGER OF A FREEZING CONDITION.

SEC. 02.216. STAKED SILT FENCES: ALL MATERIALS AND INSTALLATION PROCEDURES SHALL BE IN ACCORDANCE WITH THE FLORIDA DEPARTMENT OF TRANSPORTATION STANDARD SPECIFICATIONS FOR ROAD AND BRIDGE CONSTRUCTION, CURRENT EDITION, AND THE STATE OF FLORIDA DEPARTMENT OF TRANSPORTATION DESIGN STANDARDS FOR DESIGN, CONSTRUCTION, MAINTENANCE AND UTILITY OPERATIONS ON THE STATE HIGHWAY SYSTEM, CURRENT EDITION.

SEC. 02.217. TEMPORARY PREVENTION, CONTROL, AND ABATEMENT OF EROSION AND WATER POLLUTION: ALL MATERIALS AND INSTALLATIONS SHALL BE IN ACCORDANCE WITH THE FLORIDA DEPARTMENT OF TRANSPORTATION STANDARD SPECIFICATIONS FOR ROAD AND BRIDGE CONSTRUCTION, CURRENT EDITION, AND CONSTRUCTED IN ACCORDANCE WITH THE STATE OF FLORIDA DEPARTMENT OF TRANSPORTATION DESIGN STANDARDS FOR DESIGN, CONSTRUCTION, MAINTENANCE AND UTILITY OPERATIONS ON THE STATE HIGHWAY SYSTEM, CURRENT EDITION.

SEC. 02.218. FENCING: ALL MATERIALS SHALL BE IN ACCORDANCE WITH THE FLORIDA DEPARTMENT OF TRANSPORTATION STANDARD SPECIFICATIONS FOR ROAD AND BRIDGE CONSTRUCTION, CURRENT EDITION, AND CONSTRUCTED IN ACCORDANCE WITH THE STATE OF FLORIDA DEPARTMENT OF TRANSPORTATION DESIGN STANDARDS FOR DESIGN, CONSTRUCTION, MAINTENANCE AND UTILITY OPERATIONS ON THE STATE HIGHWAY SYSTEM, CURRENT EDITION.

SEC. 02.219. GUARDRAIL: ALL MATERIALS SHALL BE IN ACCORDANCE WITH THE FLORIDA DEPARTMENT OF TRANSPORTATION STANDARD SPECIFICATIONS FOR ROAD AND BRIDGE CONSTRUCTION, CURRENT EDITION, AND CONSTRUCTED IN ACCORDANCE WITH THE STATE OF FLORIDA DEPARTMENT OF TRANSPORTATION DESIGN STANDARDS FOR DESIGN, CONSTRUCTION, MAINTENANCE AND UTILITY OPERATIONS ON THE STATE HIGHWAY SYSTEM, CURRENT EDITION.

SEC. 02.220. CONCRETE: ALL MATERIALS SHALL BE IN ACCORDANCE WITH THE FLORIDA DEPARTMENT OF TRANSPORTATION STANDARD SPECIFICATIONS FOR ROAD AND BRIDGE CONSTRUCTION, CURRENT EDITION, AND CONSTRUCTED IN ACCORDANCE WITH THE STATE OF FLORIDA DEPARTMENT OF TRANSPORTATION DESIGN STANDARDS FOR DESIGN, CONSTRUCTION, MAINTENANCE AND UTILITY OPERATIONS ON THE STATE HIGHWAY SYSTEM, CURRENT EDITION.

SEC. 02.221. FIELD ENGINEERING, SURVEYING AND RIGHT-OF-WAY STAKING:
A. FIELD ENGINEERING AND SURVEYING SERVICES SHALL INCLUDE SURVEY WORK TO ESTABLISH RIGHT-OF-WAY LINES AND LEVELS AND TO LOCATE AND LAY OUT SITE IMPROVEMENTS, STRUCTURES, AND CONTROLLING LINES AND LEVELS REQUIRED FOR THE CONSTRUCTION OF THE WORK. ALSO INCLUDED ARE SUCH ENGINEERING SERVICES AS ARE SPECIFIED OR REQUIRED TO EXECUTE CONTRACTOR'S CONSTRUCTION METHODS. ENGINEERS AND SURVEYORS SHALL BE LICENSED PROFESSIONALS IN THE STATE OF FLORIDA.
B. EXISTING BASIC HORIZONTAL AND VERTICAL CONTROL POINTS FOR THE PROJECT ARE THOSE DESIGNATED ON THE DRAWINGS. CONTRACTOR SHALL LOCATE AND PROTECT CONTROL POINTS PRIOR TO STARTING SITE WORK AND SHALL PRESERVE ALL PERMANENT REFERENCE POINTS DURING CONSTRUCTION. IN WORKING NEAR ANY PERMANENT PROPERTY CORNERS OR REFERENCE MARKERS, CONTRACTOR SHALL USE CARE NOT TO REMOVE OR DISTURB ANY SUCH MARKERS. IN THE EVENT THAT MARKERS MUST BE REMOVED OR ARE DISTURBED DUE TO PROXIMITY OF THE CONSTRUCTION WORK, CONTRACTOR SHALL HAVE THEM REFERENCED AND RESET BY A LAND SURVEYOR QUALIFIED UNDER THE LAWS OF THE STATE OF FLORIDA.
C. CONTRACTOR SHALL LAY OUT THE WORK AT THE LOCATION AND TO THE LINES AND GRADES SHOWN ON THE DRAWINGS. SURVEY NOTES INDICATING THE INFORMATION AND MEASUREMENTS USED IN ESTABLISHING LOCATIONS AND GRADES SHALL BE KEPT IN NOTEBOOKS AND COPIES FURNISHED TO PROJECT ENGINEER AND THE COUNTY ENGINEER. AS A MINIMUM THE FOLLOWING ITEMS WILL BE STAKED:
1. RIGHT-OF-WAY, STAKED AT EACH STATION OR WHEREVER THE RIGHT-OF-WAY CHANGES WIDTH OR DIRECTION, AT ANY OFFSET DESIRED;
2. CUT OR FILL TO CENTERLINE GRADE AND SWALE GRADE AT EACH STATION OR WHEREVER CHANGES OCCUR AT POINTS OF VERTICAL INTERSECTION; AND
3. SET PROPOSED CENTERLINE ELEVATION OF ALL INTERSECTING ROADS ONE TIME AND NOTE THOSE ELEVATIONS IN FIELDBOOK; COMPARE THOSE ELEVATIONS AND BRING ANY DISCREPANCIES TO THE ATTENTION OF THE PROJECT ENGINEER.
ALL THE ABOVE MENTIONED SURVEY WORK WILL BE DONE BY A SURVEYOR LICENSED TO PRACTICE IN THE STATE OF FLORIDA.

SEC. 02.222. OBSTRUCTIONS IN RIGHT-OF-WAY:
A. HEADWALLS, FENCES, MAIL BOXES, STATUES, WALKWAYS, AND OTHER OBSTRUCTIONS PLACED IN THE RIGHT-OF-WAY WILL BE REMOVED FROM THE WORK AREA, AS REQUIRED TO KEEP THE WORK PROGRESSING, BY THE CONTRACTOR. IN THE EVENT THAT THE OWNER CANNOT BE IDENTIFIED OR IS UNABLE OR UNWILLING TO REMOVE SAID OBSTRUCTIONS THEMSELVES, THE OBSTRUCTION WILL BE POSTED WITH A NOTICE, IN WRITING, BY THE CONTRACTOR 24 HOURS PRIOR TO ANY REMOVAL, THAT SAID OBJECT WILL BE REMOVED. THE CONTRACTOR WILL NOT BE RESPONSIBLE FOR ANY DAMAGE TO SAID OBJECTS THAT OCCURS WHILE BEING MOVED BY THE CONTRACTOR, AFTER PROPER NOTIFICATION AND THE APPROVAL OF THE PROJECT ENGINEER. ANY OBJECTS THAT ARE REMOVED FROM WITHIN THE RIGHT-OF-WAY, EXCEPT MAILBOXES, WILL BE HAULED AWAY AND DISPOSED OF BY THE CONTRACTOR IN A PROPER LANDFILL.
B. MAILBOXES MOVED DURING CONSTRUCTION, WILL BE REPLACED AT A LOCATION 3 FEET FROM THE EDGE OF PAVEMENT BY THE CONTRACTOR, PROVIDING THE SUPPORT POLE IS WOOD AND LESS THAN 4 INCHES IN DIAMETER OR IS A BREAKAWAY TYPE POLE. IF THE ORIGINAL SUPPORT POLE IS DAMAGED OR UNSATISFACTORY, THE CONTRACTOR WILL NOT BE REQUIRED TO REPLACE OR RELOCATE THE MAILBOX.

SEC. 02.223. SHOP DRAWING SUBMITTALS: THE FOLLOWING INFORMATION AND/OR DRAWINGS SHALL BE SUBMITTED TO THE PROJECT ENGINEER PRIOR TO BEGINNING WORK:
A. INFORMATION ON THE PIPE AND CULVERTS, INDICATING THE TYPE, CLASS, SIZE, AND OTHER RELEVANT INFORMATION;
B. ASPHALT MIX DESIGN;
C. DOCUMENTATION ON ALL OTHER MATERIALS USED INCLUDING, BUT NOT LIMITED TO, FILTER FABRIC, GUARDRAILS, CONCRETE, STEEL POSTS, CURING COMPOUND, AND JOINT MATERIAL;
D. SAMPLE OF TAG FOR WRITTEN NOTIFICATION OF OWNERS; AND
E. TRAFFIC PLAN (A DRAWING TO SCALE OF EACH PHASE SHOWING ALL BARRICADES, SIGNS AND FLAGMEN IS REQUIRED).

DATE	REMARK	DR	CH
14-NOV-13	INITIAL SUBMITTAL	MLW	

JOB # 13001

SCALE 1"=10'

APPROVED BY:
NOT VALID WITHOUT ORIGINAL SIGNATURE AND RAISED SEAL
SEAL
SIGNED:
DATE:

2925 KENILWORTH BLVD.,
SEBRING, FLORIDA 33870
863-385-5564 PHONE
863-385-2462 FAX
CERTIFICATE OF AUTHORIZATION # 5684
ROGER DALE POLSTON P. E. # 33222
MARVIN LUTHER WOLFE P.E. # 46030
CLINTON E. HOWERTON JR. P.E. # 61021

PE Polston Engineering Inc.
CIVIL ENGINEERING CONSULTANTS

LAKE VERONA NORTHWEST BASIN
BEST MANAGEMENT PRACTICES PROJECT
RAINTANK ENLARGEMENT AND SPECIFICATIONS

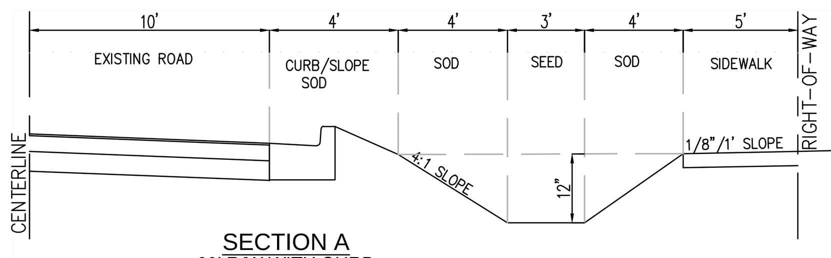

SECTION A
60' R/W WITH CURB, SWALE, AND OFFSET SIDEWALK

7 CUFT PER LF

ROAD GRADE 100'	USEABLE LENGTH OF SWALE	VOLUME PER
0%	100'	677 CF
1%	96.25'	274 CF
2%	50'	133 CF
3%	33.33'	86 CF
4%	25'	63 CF
5%	20'	49 CF
6%	16.67'	40 CF

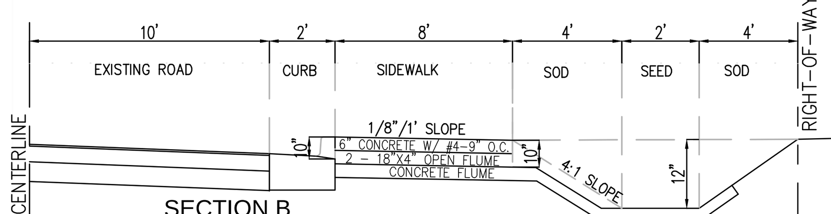

SECTION B
60' R/W WITH CURB, 8' SIDEWALK AND 12" SWALE

6 CUFT PER LF

ROAD GRADE 100'	USEABLE LENGTH OF SWALE	VOLUME PER
0%	100'	581 CF
1%	96.25'	226 CF
2%	50'	110 CF
3%	33.33'	71 CF
4%	25'	52 CF
5%	20'	40 CF
6%	16.67'	33 CF

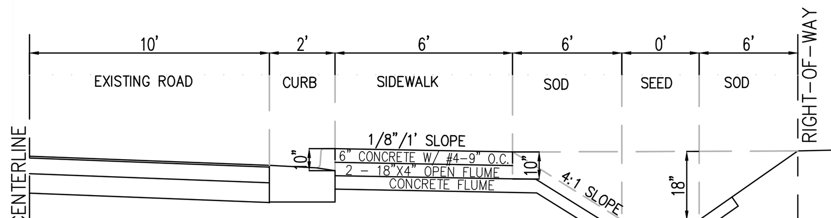

SECTION C
60' R/W WITH CURB, 8' SIDEWALK AND 18" SWALE

9 CUFT PER LF

ROAD GRADE 100'	USEABLE LENGTH OF SWALE	VOLUME PER
0%	100'	862 CF
1%	96.25'	421 CF
2%	75'	216 CF
3%	50'	141 CF
4%	37.5'	104 CF
5%	30'	81 CF
6%	25'	66 CF

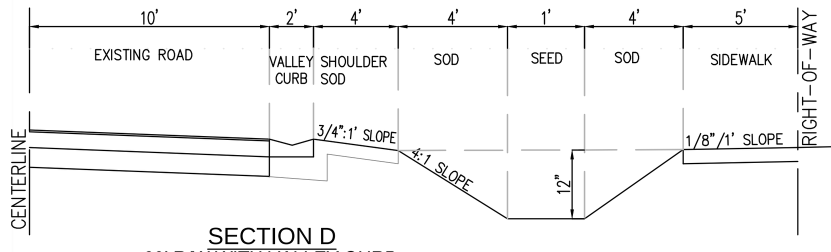

SECTION D
60' R/W WITH VALLEY CURB, SWALE, AND OFFSET SIDEWALK

5 CUFT PER LF

ROAD GRADE 100'	USEABLE LENGTH OF SWALE	VOLUME PER
0%	100'	485 CF
1%	96.25'	179 CF
2%	50'	87 CF
3%	33.33'	57 CF
4%	25'	41 CF
5%	20'	32 CF
6%	16.67'	26 CF

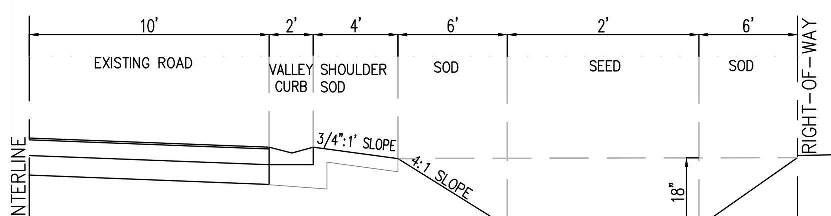

SECTION E
60' R/W WITH VALLEY CURB AND SWALE

12 CUFT PER LF

ROAD GRADE 100'	USEABLE LENGTH OF SWALE	VOLUME PER
0%	100'	1145 CF
1%	96.25'	607 CF
2%	75'	320 CF
3%	50'	208 CF
4%	37.5'	152 CF
5%	30'	118 CF
6%	25'	96 CF

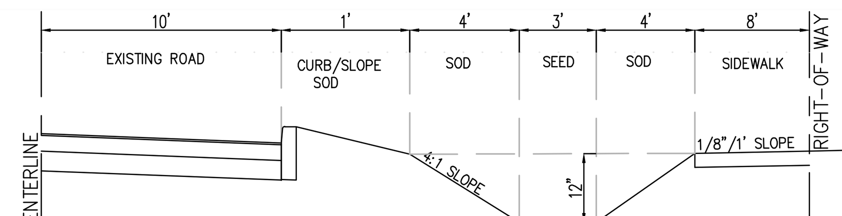

SECTION F
60' R/W WITH CURB, SWALE, AND 8' SIDEWALK

7 CUFT PER LF

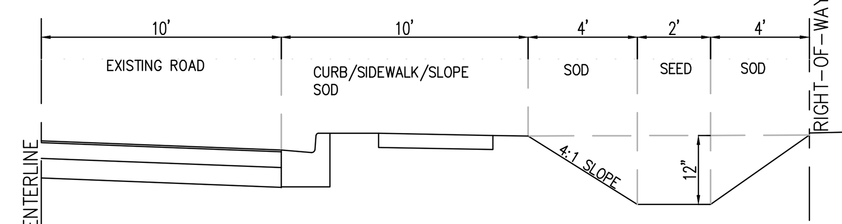

SECTION G
60' R/W WITH UTILITY STRIP, SIDEWALK AND SWALE

6 CUFT PER LF

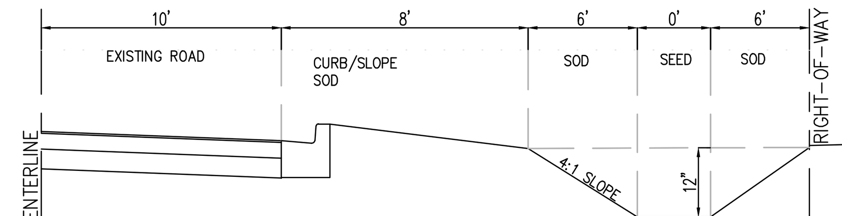

SECTION H
60' R/W WITH CURB AND SWALE

9 CUFT PER LF

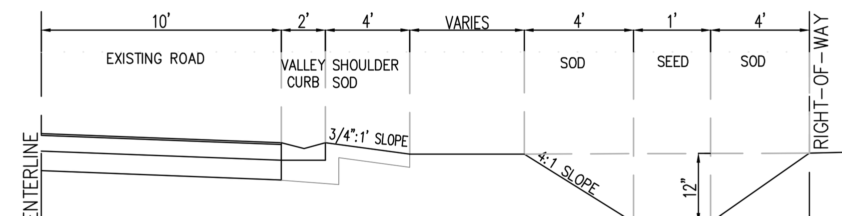

SECTION I
50 OR 60' R/W WITH SHOULDER AND SWALE

5 CUFT PER LF

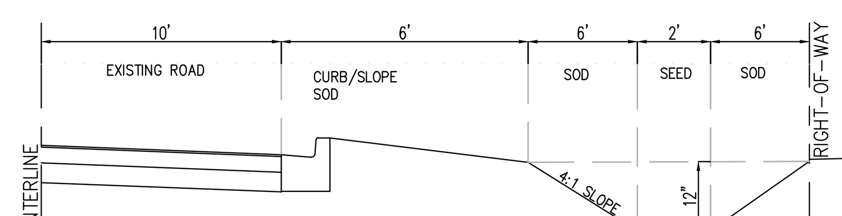

SECTION J
60' R/W WITH CURB AND SWALE

12 CUFT PER LF

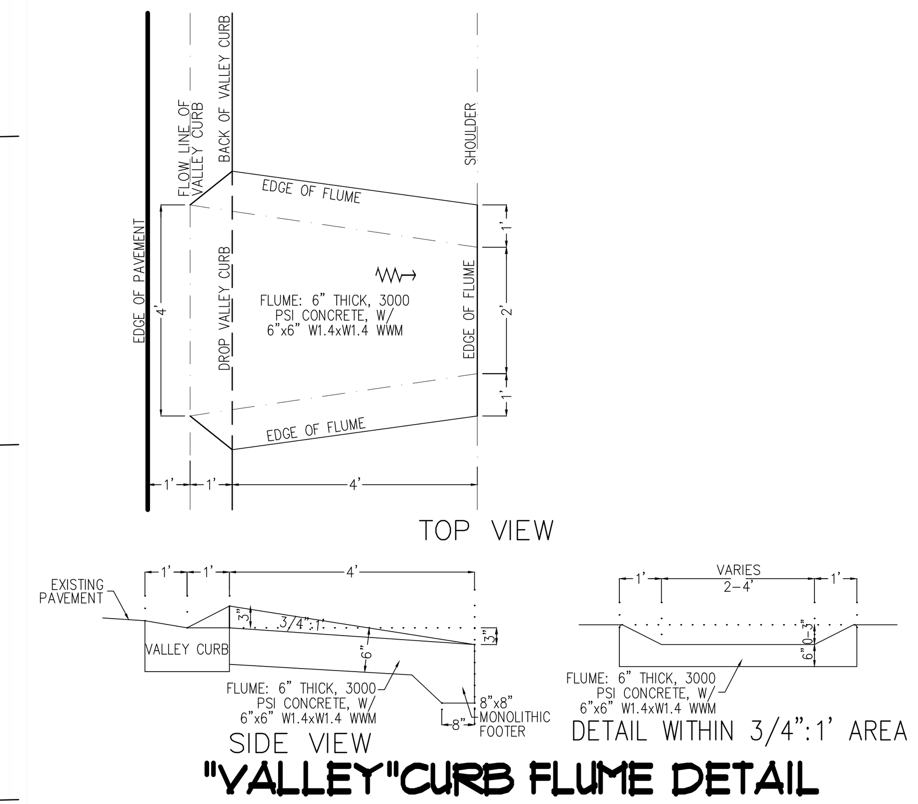

"VALLEY"CURB FLUME DETAIL

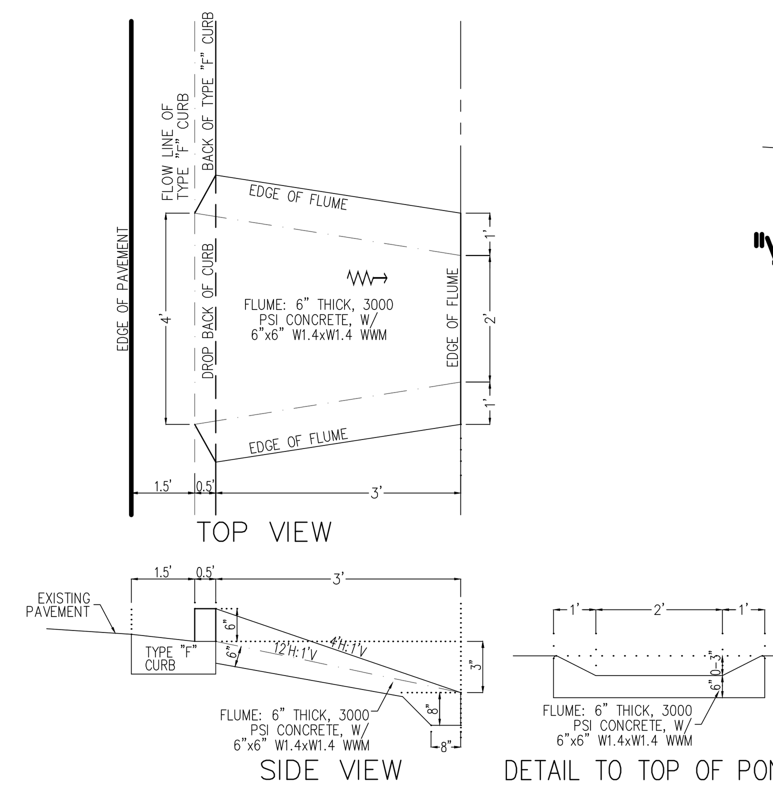

TYPE "F" CURB FLUME DETAIL

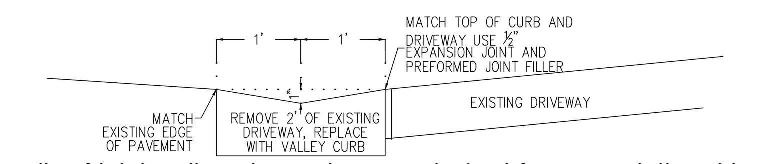

"VALLEY" CURB TO DRIVEWAY CONNECTION

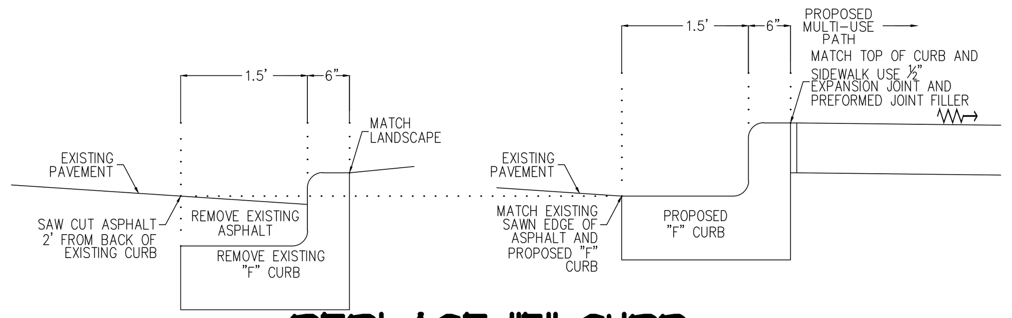

REPLACE "F" CURB

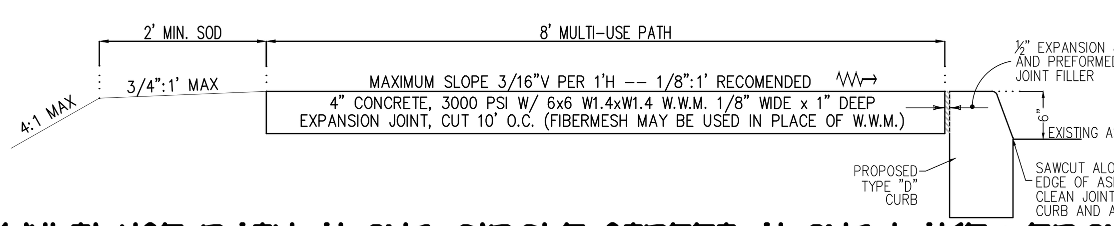

MULTI-USE PATH ALONG CIRCLE STREET ALONG LAKE VERONA

POND AND SWALE CONSTRUCTION AND MAINTENANCE INSTRUCTIONS:
-ROUGH SIZING AND GRADING OF THE POND SHOULD BE MADE FIRST TO PROVIDE IMMEDIATE SEDIMENTATION AREA FOR STORM WATER RUNOFF FROM THE CONSTRUCTION AREA.
-DURING THE CONSTRUCTION PHASE CARE SHOULD BE TAKEN TO KEEP POND AREA AS FREE AS POSSIBLE OF ANY SEALANTS SUCH AS ASPHALT, SHELL, CONCRETE, MUCK, ETC. WHICH MAY SEAL THE POND BOTTOM AND REDUCE THE PERCOLATION RATE.
-SOD GROWN ON MUCK SHOULD NOT BE USED.
-POND BOTTOM SHOULD BE MADE AS ONE OF THE FINAL STEPS OF CONSTRUCTION.
-ROUTINE MOWING AND INSPECTION OF SWALES AND POND.
-REPAIR ANY EROSION DAMAGE FOUND.
-PERIODICALLY SWALES AND/OR POND MAY REQUIRE CLEANING OF SEDIMENTS IN ORDER TO MAINTAIN PERCOLATION VALUES. THIS COULD INCLUDE THE REMAKING OF THE POND BOTTOM.

-THIS PROJECT IS NOT SUBJECT TO FLOODING IN A 100-YEAR REOCCURRENCE INTERVAL STORM.
-ALL ELEVATIONS REFER TO NGVD DATUM.
-ALL UNDERGROUND UTILITIES WITHIN THE ROADWAY ARE TO BE INSTALLED PRIOR TO PLACEMENT OF BASE.
-ALL SWALES AND DITCHES, COMPLETE WITH EROSION CONTROLS, ARE TO BE CONSTRUCTED AS PART OF THE INITIAL IMPROVEMENTS.
-ALL DRIVEWAY CONSTRUCTION MATERIALS USED WITHIN THE RIGHT-OF-WAY ARE TO BE TESTED AS PER CITY OF AVON PARK REQUIREMENTS AND ALL TEST RESULTS ARE TO BE SUBMITTED BY THE TESTING LAB DIRECTLY TO THE ENGINEER OF RECORD BEFORE ANY AS-BUILT INSPECTION AND SUBMITTALS WILL BE MADE.
-ALL DISTURBED AREAS IN THE RIGHT-OF-WAY WILL BE RESTORED AND SODDED.
-THERE ARE NO FLOODPLAINS, WETLANDS, CUTTHROAT GRASS SEEPS, HISTORICAL AND ARCHAEOLOGICAL RESOURCES, CONES OF INFLUENCE FOR POTABLE WELLS, OR AQUIFER RECHARGE AREAS WITHIN THE PROJECT AREA.
-A MAINTENANCE OF TRAFFIC (MOT) SHALL COMPLY WITH FLORIDA DEPARTMENT OF TRANSPORTATION (FDOT) STANDARD INDEX FOR CONSTRUCTION WITHIN THE FDOT RIGHT-OF-WAY.

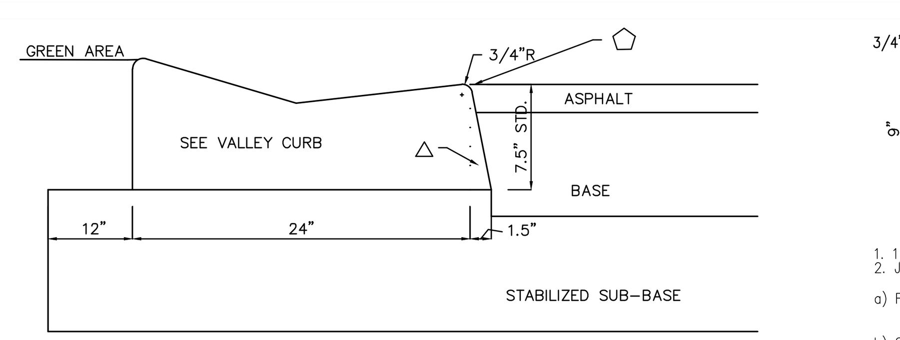

△ WHEN CURB AND GUTTER, AND VALLEY GUTTER ARE CONSTRUCTED ADJACENT TO FLEXIBLE PAVEMENT, THE FACE AT THE LIP OF THE GUTTER SHALL BE SLOPED AS SHOWN IN THIS DETAIL.
⬠ SURFACE ON THE LOW SIDE OF PAVEMENT TO BE 1/4" ABOVE THE LIP OF GUTTER. SURFACE ON HIGH SIDE TO BE FLUSH WITH GUTTER.
WHEN USED ON HIGH SIDE OF PAVEMENT, THE CROSS SLOPE OF THE GUTTER SHALL MATCH THE CROSS SLOPE OF THE ADJACENT PAVEMENT AND THE THICKNESS OF THE LIP SHALL BE 6".

CURB AND GUTTER ADJACENT TO FLEXIBLE PAVEMENT

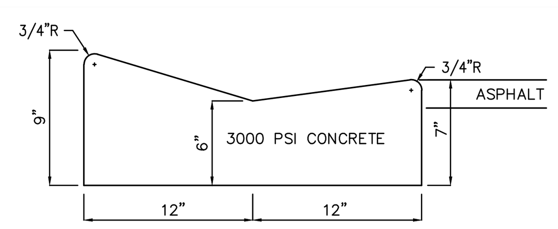

1. 1/4" WIDE JOINTS SHALL BE CONSTRUCTED AT A MAXIMUM SPACING OF 15'.
2. JOINTS MAY BE FORMED IN THE PLASTIC CONCRETE OR SAWED AFTER THE CONCRETE HAS HARDENED.
a) FORMED JOINTS MAY BE CONSTRUCTED BY INSTALLING A PARTING STRIP TO BE LEFT IN PLACE OR BY DEPRESSING AN APPROVED TOOL INTO THE PLASTIC CONCRETE.
b) SAWING OF JOINTS SHALL BEGIN 4 TO 18 HOURS AFTER PLACING OR AS SOON AS THE CONCRETE HAS HARDENED SUFFICIENTLY TO PERMIT SAWING WITHOUT EXCESSIVE RAVELING AND BEFORE UNCONTROLLED CRACKING OCCURS.
3. JOINTS SHALL BE SEALED. PRIOR TO SEALING, ALL FOREIGN MATERIAL SHALL BE REMOVED FROM THE JOINTS AND THE JOINTS SHALL BE THOROUGHLY DRY.

VALLEY CURB
(DENOTED AS CURB ON PLANS)

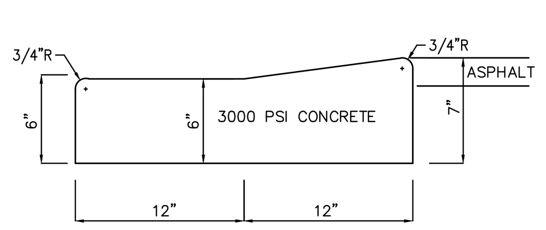

1. THE DROP VALLEY CURB SHOULD TRANSITION FROM FULL 9" IN HEIGHT TO 6" IN 3'.
2. THE 6" OUTER EDGE SHOULD BE 5' IN LENGTH.
3. THE ENTIRE TRANSITION AND FLAT AREA SHOULD BE CENTERED ON PROPERTY LINE.
4. FOLLOW ALL OTHER APPLICABLE DROP CURB NOTES.

DROP VALLEY CURB

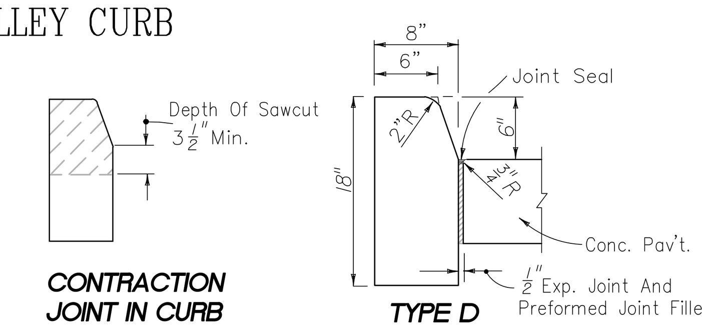

NOTE: FOR USE ADJACENT TO CONCRETE OR FLEXIBLE PAVEMENT, CONCRETE SHOWN. EXPANSION JOINT, PREFORMED JOINT FILLER AND JOINT SEAL ARE REQUIRED BETWEEN CURBS AND CONCRETE PAVEMENT ONLY.

CONCRETE CURB

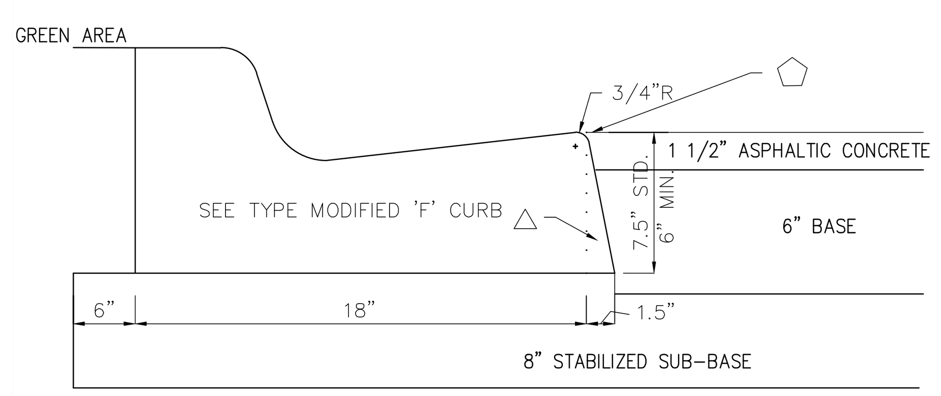

△ -WHEN CURB AND GUTTER, AND VALLEY GUTTER ARE CONSTRUCTED ADJACENT TO FLEXIBLE PAVEMENT, THE FACE AT THE LIP OF THE GUTTER SHALL BE SLOPED AS SHOWN IN THIS DETAIL.
⬠ -SURFACE ON THE LOW SIDE OF PAVEMENT TO BE ¼" ABOVE THE LIP OF GUTTER. SURFACE ON HIGH SIDE TO BE FLUSH WITH GUTTER.
-WHEN USED ON HIGH SIDE OF PAVEMENT, THE CROSS SLOPE OF THE GUTTER SHALL MATCH THE CROSS SLOPE OF THE ADJACENT PAVEMENT AND THE THICKNESS OF THE LIP SHALL BE 6".

CURB AND GUTTER ADJACENT TO FLEXIBLE PAVEMENT

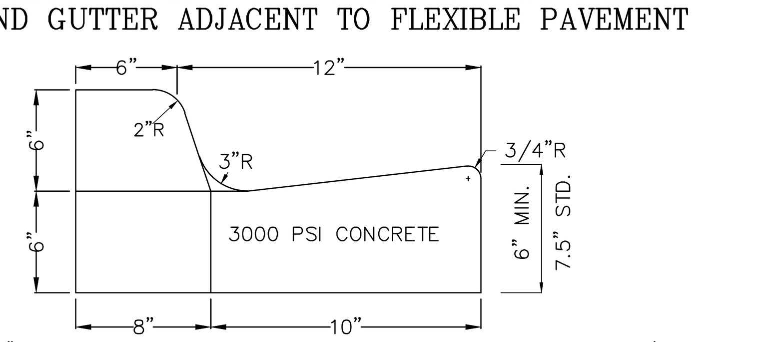

1. 1/4" WIDE JOINTS SHALL BE CONSTRUCTED AT A MAXIMUM SPACING OF 15'.
2. JOINTS MAY BE FORMED IN THE PLASTIC CONCRETE OR SAWED AFTER THE CONCRETE HAS HARDENED.
a) FORMED JOINTS MAY BE CONSTRUCTED BY INSTALLING A PARTING STRIP TO BE LEFT IN PLACE OR BY DEPRESSING AN APPROVED TOOL INTO THE PLASTIC CONCRETE.
b) SAWING OF JOINTS SHALL BEGIN 4 TO 18 HOURS AFTER PLACING OR AS SOON AS THE CONCRETE HAS HARDENED SUFFICIENTLY TO PERMIT SAWING WITHOUT EXCESSIVE RAVELING AND BEFORE UNCONTROLLED CRACKING OCCURS.
3. JOINTS SHALL BE SEALED. PRIOR TO SEALING, ALL FOREIGN MATERIAL SHALL BE REMOVED FROM THE JOINTS AND THE JOINTS SHALL BE THOROUGHLY DRY.

MODIFIED TYPE 'F' CURB

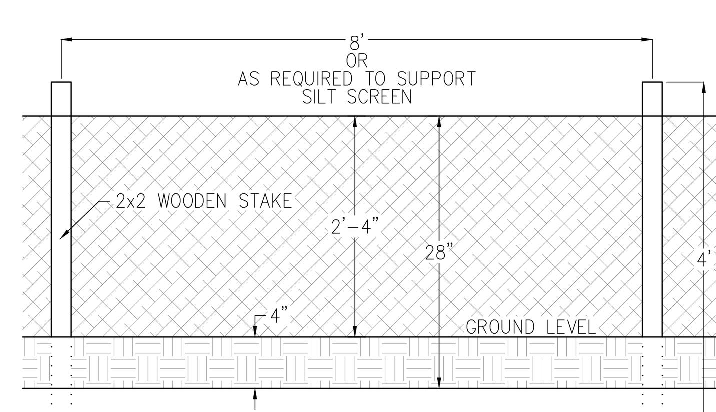

FRONT VIEW

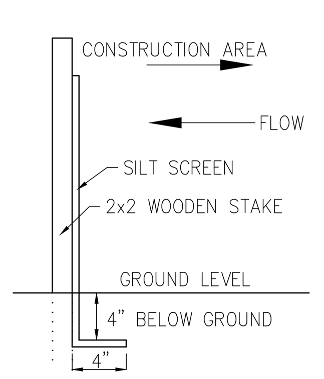

SECTION

SILT FENCES

THIS WORK SHALL CONSIST OF FURNISHING, INSTALLING, MAINTAINING AND REMOVING TEMPORARY SILT FENCES, IN ACCORDANCE WITH THE MANUFACTURER'S DIRECTIONS, THESE SPECIFICATIONS, THE DETAILS AS SHOWN ON THE DRAWINGS AND THE FLORIDA DEPARTMENT OF TRANSPORTATION ROADWAY AND TRAFFIC DESIGN STANDARDS.

SILT FENCES WILL BE FLORIDA DEPARTMENT OF TRANSPORTATION (FDOT) TYPE III AS DESCRIBED IN FDOT ROADWAY AND TRAFFIC DESIGN STANDARDS, INDEX 102, WITH FILTER FABRIC CONFORMING TO SECTION 985, FDOT STANDARD SPECIFICATIONS.

IN ALL CASES THE FILTER FABRIC WILL BE SECURELY ANCHORED TO THE GROUND OR BURIED IN THE GROUND SO THAT IT WILL NOT BE PUSHED UP BY THE EXPECTED RUNOFF. THE ATTACHMENT TO EXISTING TREES WILL NOT BE PERMITTED.

THE CONTRACTOR SHALL, AT HIS EXPENSE, PROVIDE ROUTINE MAINTENANCE OF PERMANENT AND TEMPORARY EROSION CONTROL FEATURES UNTIL THE PROJECT IS COMPLETED AND ACCEPTED. IF SUCH EROSION CONTROL FEATURES MUST BE RECONSTRUCTED DUE TO CONTRACTOR'S NEGLIGENCE OR CARELESSNESS OR, IN THE CASE OF TEMPORARY EROSION CONTROL FEATURES, FAILURE BY CONTRACTOR TO INSTALL PERMANENT EROSION CONTROL FEATURES AS SCHEDULED, SUCH REPLACEMENT SHALL BE AT CONTRACTOR'S EXPENSE.

SILT FENCES MUST BE INSTALLED PRIOR TO ANY CONSTRUCTION AND MUST BE MAINTAINED THROUGHOUT THE DURATION OF THE PROJECT.

SILT/TURBIDITY SCREENS

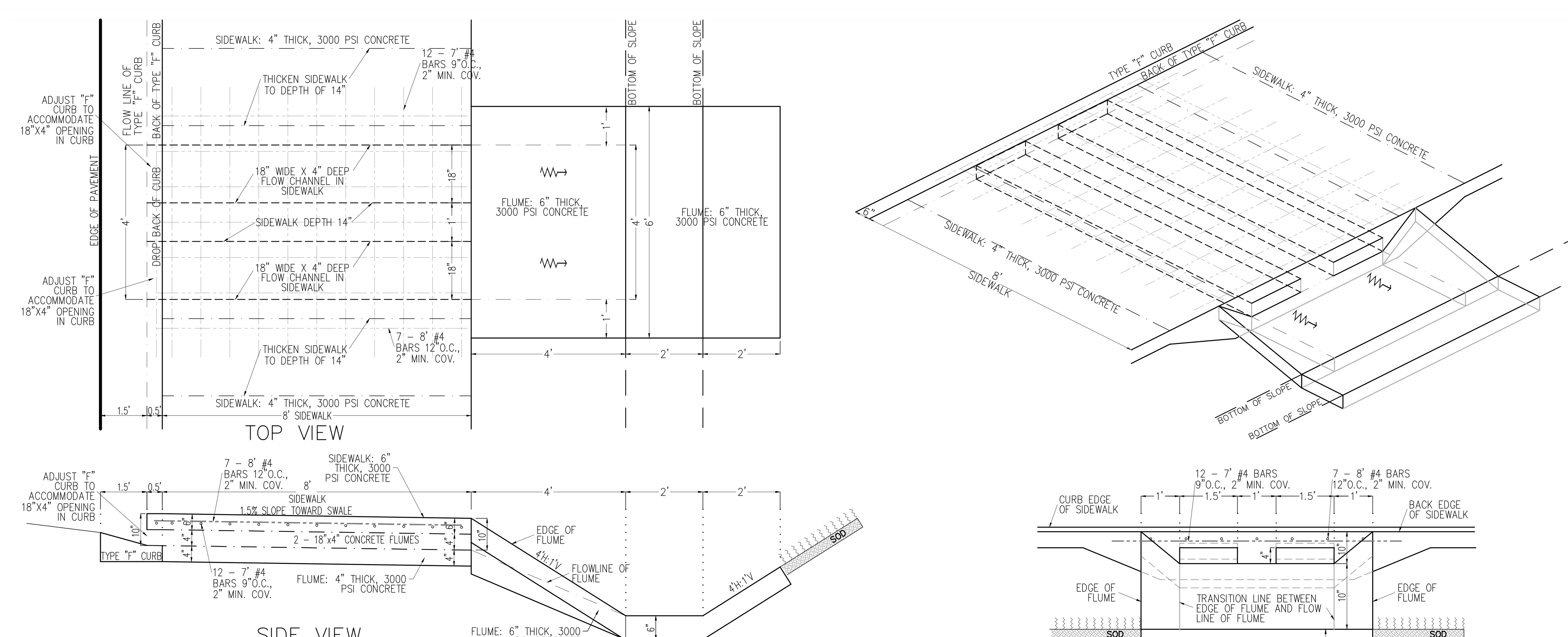

TYPE "F" CURB SIDEWALK FLUME DETAIL

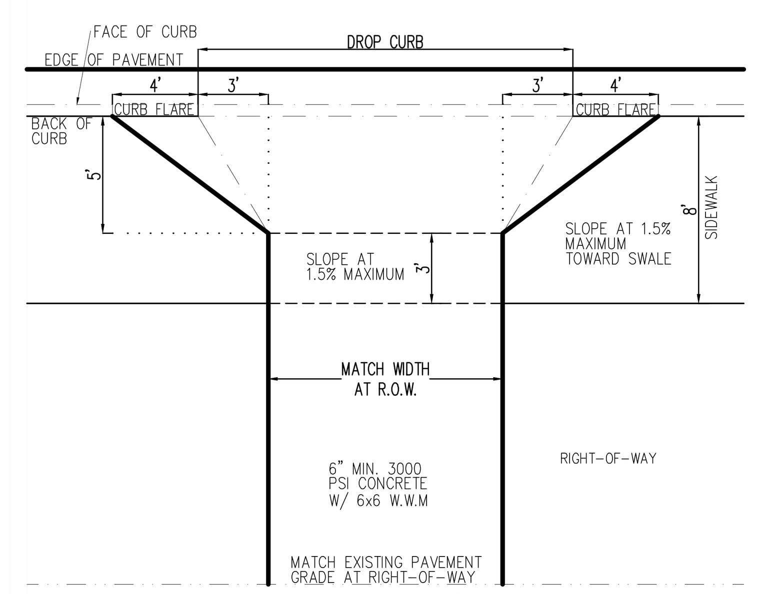

REBUILD DRIVEWAY W/ MULTI USE PATH ADJACENT TO CURB

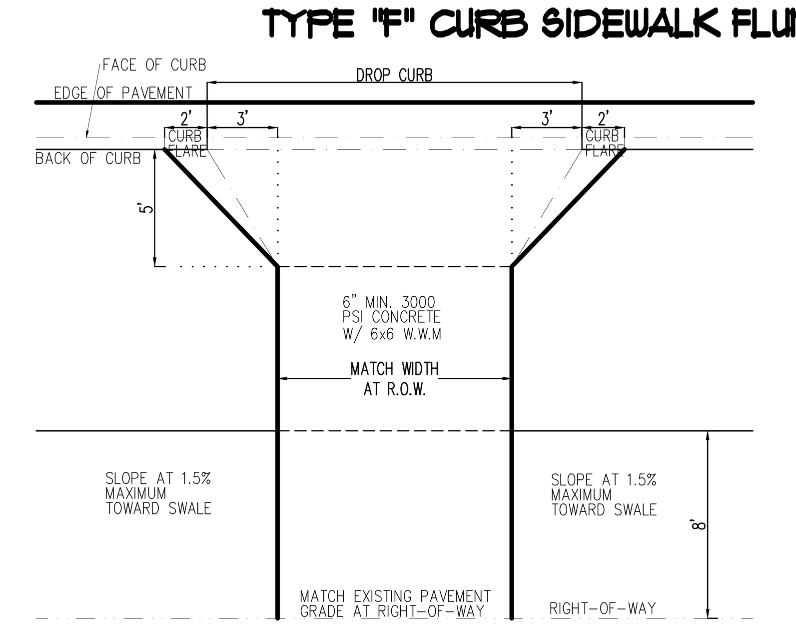

REBUILD DRIVEWAY W/ MULTI USE PATH ADJACENT TO RIGHT-OF-WAY

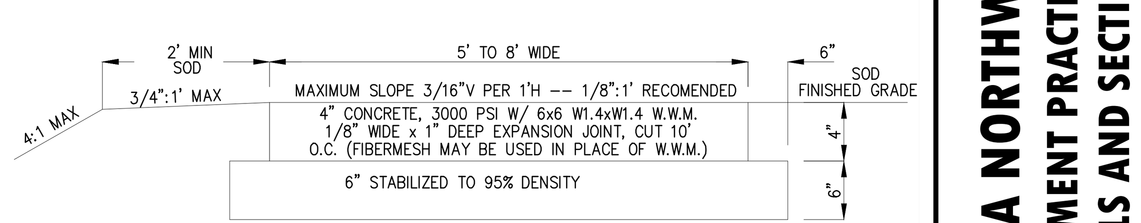

HANDICAP ACCESSIBILITY SIDEWALK REQUIREMENTS:
-RUNNING SLOPE MUST NOT EXCEED 5% (1:20), OTHERWISE IT IS CONSIDERED A RAMP
-MAXIMUM CROSS SLOPE MUST NOT EXCEED 1.5% (3/16":1')

RAMPS (SLOPE GREATER THAN 1:20 OR 5%):
-RAMPS WITH SLOPE 1:20 (5%) TO 1:16(6.25%) CAN HAVE A MAXIMUM HORIZONTAL PROJECTION FOR 40'.
-RAMPS WITH SLOPE 1:16 (6.25%) TO 1:12(8.33%) CAN HAVE A MAXIMUM HORIZONTAL PROJECTION FOR 30'.
-RAMPS MUST HAVE A 5' LEVEL LANDING ABOVE AND A 6' LEVEL LANDING BELOW EACH RAMP.
-RAMPS HAVE A MAXIMUM SLOPE OF 1:12 (8.33%)

HANDRAIL REQUIREMENTS:
-IF A RAMP RUN HAS A RISE GREATER THAN 6" OR A HORIZONTAL PROJECTION GREATER THAN 72" A HANDRAIL WILL BE REQUIRED ON BOTH SIDES.
-HANDRAILS ARE NOT REQUIRED ON CURB RAMPS.
-A HANDRAIL WILL BE REQUIRED IF THERE IS A DROP-OFF GREATER THAN 10" CLOSER THAN 2' FROM THE THE EDGE OF SIDEWALK.
-A HANDRAIL WILL BE REQUIRED IF A SLOPE STEEPER THAN 1:2 THAT BEGINS CLOSER THAN 2' FROM THE EDGE OF SIDEWALK AND IS A DEPTH OF 30" OR GREATER.

TYPICAL SIDEWALK SECTION

DATE	REMARK	DR	CH
14-NOV-13	INITIAL SUBMITTAL	MLW	

JOB # 13001

SCALE 1"=NTS

APPROVED BY: NOT VALID WITHOUT ORIGINAL SIGNATURE AND RAISED SEAL
SEAL
SIGNED:
DATE:

2925 KENILWORTH BLVD., SEBRING, FLORIDA 33870
863-385-5564 PHONE
863-385-2462 FAX
CERTIFICATE OF AUTHORIZATION # 5684
ROGER DALE POLSTON P. E. # 33222
MARVIN LUTHER WOLFE P.E. # 46030
CLINTON E. HOWERTON JR. P.E. # 61021
Polston Engineering Inc.
CIVIL ENGINEERING CONSULTANTS

LAKE VERONA NORTHWEST BASIN
BEST MANAGEMENT PRACTICES PROJECT
DETAILS AND SECTIONS

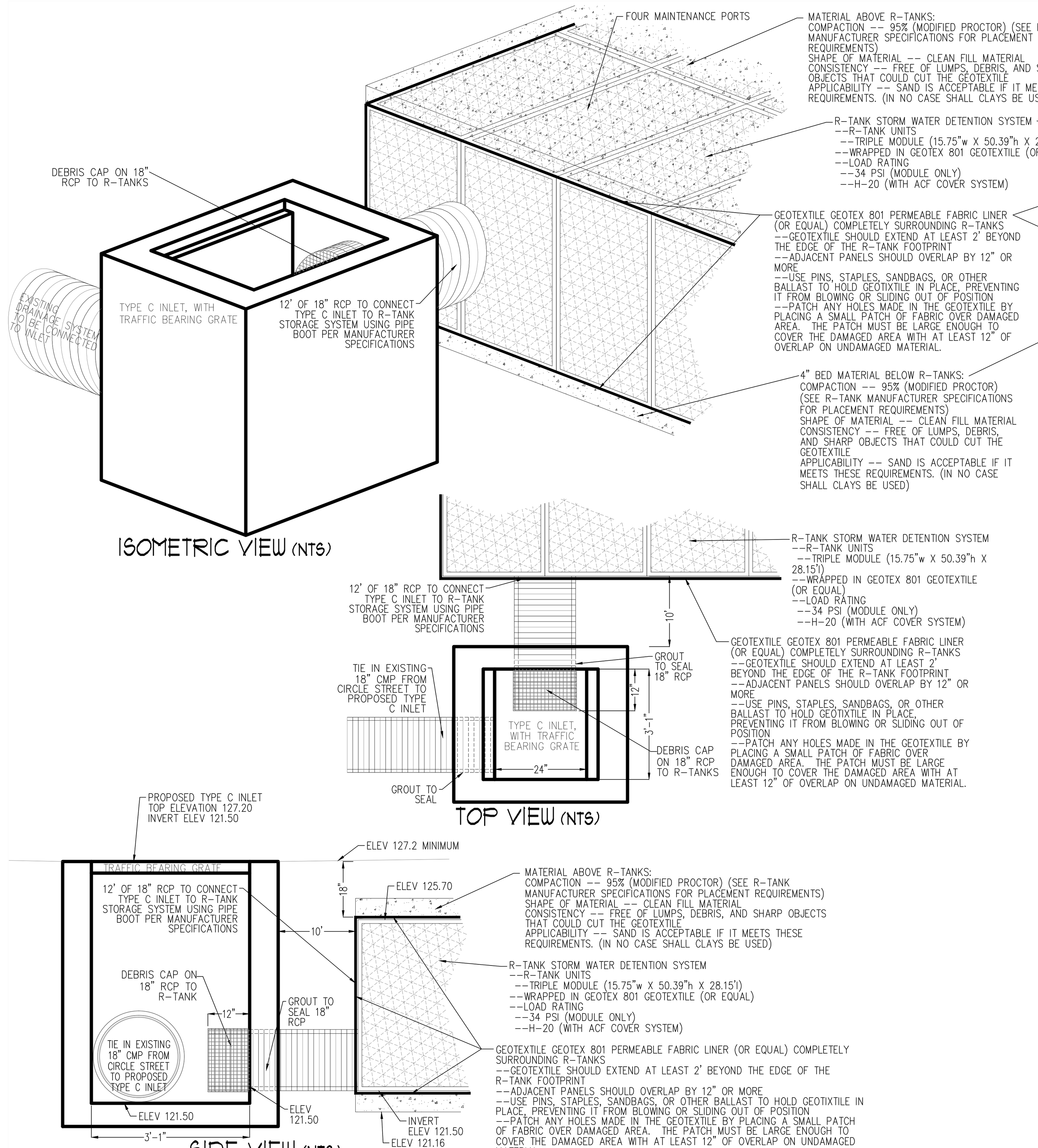

WEST INLET STRUCTURE INTO RETENTION NTS

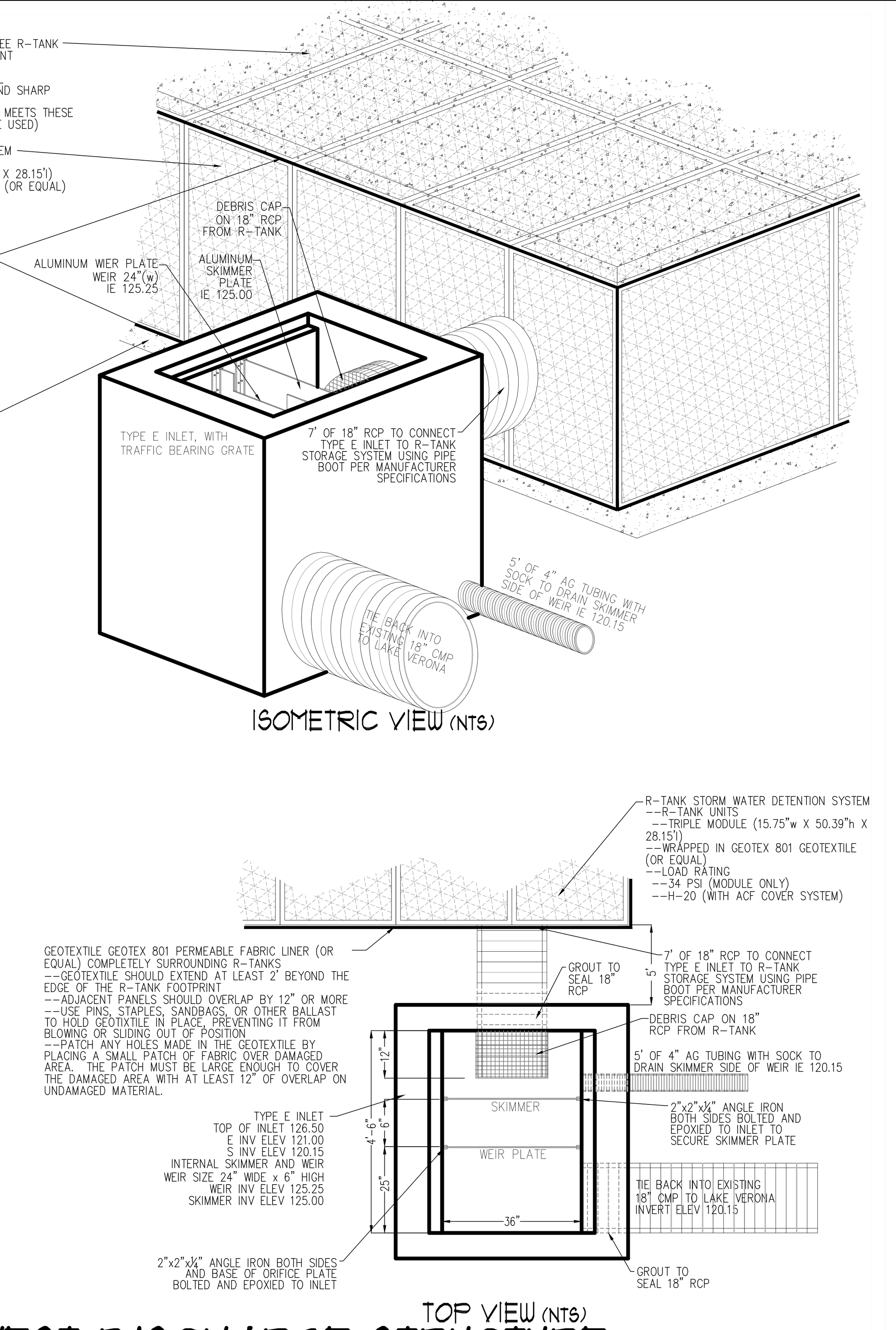

WEST DISCHARGE STRUCTURE (ISOMETRIC VIEW) (NTS)

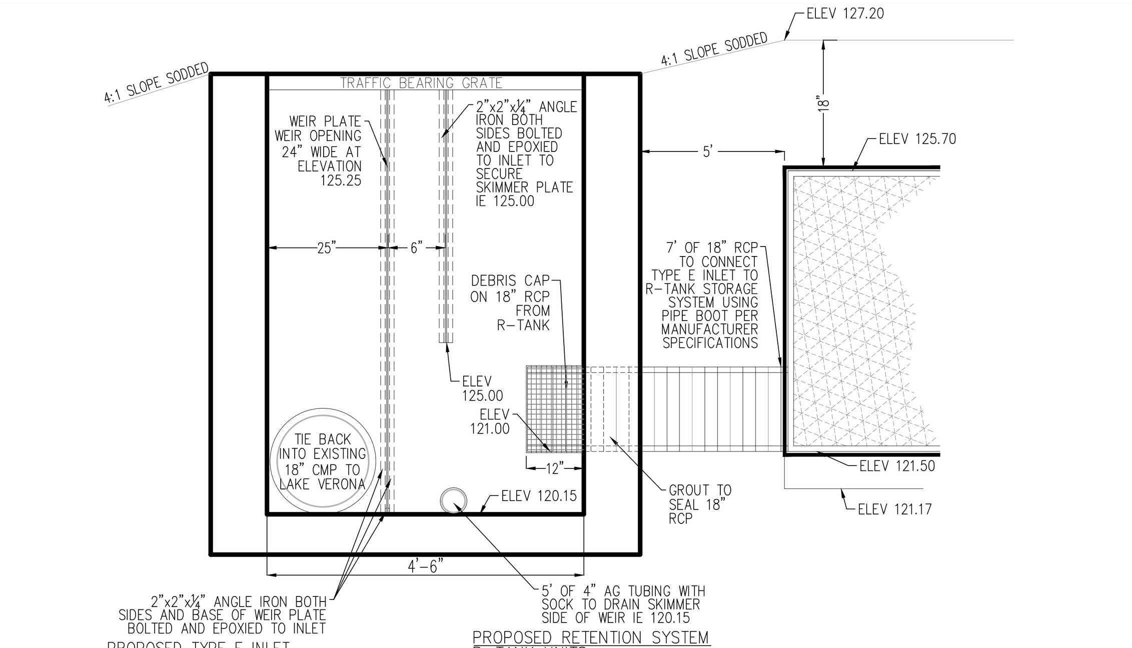

PROPOSED TYPE E INLET
TOP OF INLET 126.50
E INV ELEV 121.00 (FOR 18" RCP)
S INV ELEV 120.15 (FOR 4" AG TUBING)
S INV ELEV 120.15 (FOR EXISTING 18" CMP)

INTERNAL WEIR
WEIR SIZE 24" WIDE x 6" HIGH
INV ELEV 125.25

INTERNAL SKIMMER
INV ELEV 125.00

PROPOSED RETENTION SYSTEM
R-TANK UNITS
FINISHED SURFACE ELEV 127.20 (MIN)
TOP OF R-TANK SYSTEM 125.70 (MAX)
BOTTOM OF R-TANK SYSTEM 121.5 (MAX)
BED MATERIAL ELEV 121.17 (MAX)
SEASONAL HIGH WATER ELEV BELOW 118

R-TANK UNITS	
TRIPLE UNITS SIZE	15.75"W x 28.15"L x 50.39"H
TANK VOLUME	12.93 CU FT
STORAGE VOLUME	12.28 CU FT
NUMBER OF UNITS	180
PATTERN FOR UNITS	12 X 15
TOTAL STORAGE VOLUME	2210 CU FT
TOTAL AT WEIR ELEVATION	1970 CU FT

SIDE VIEW (NTS)

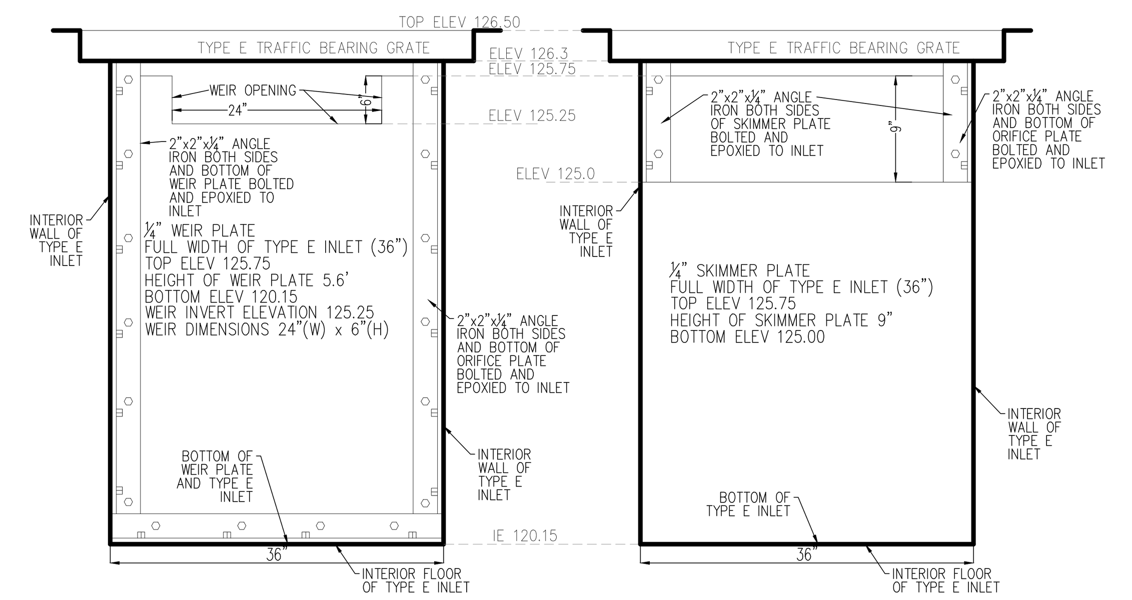

ORIFICE PLATE (NTS) SKIMMER PLATE (NTS)

WEST DISCHARGE STRUCTURE

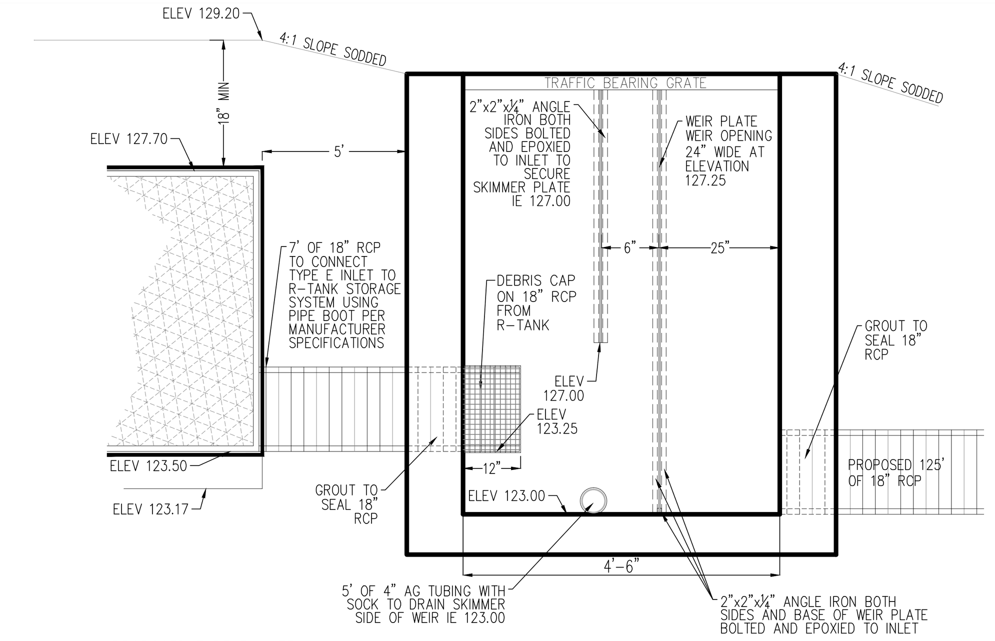

PROPOSED TYPE E INLET
TOP OF INLET 130.50
W INV ELEV 123.25 (FOR 18" RCP)
S INV ELEV 123.00 (FOR 4" AG TUBING)
E INV ELEV 123.00 (FOR 18" RCP)

INTERNAL WEIR
WEIR SIZE 24" WIDE x 6" HIGH
INV ELEV 127.25

INTERNAL SKIMMER
INV ELEV 127.00

PROPOSED RETENTION SYSTEM
R-TANK UNITS
FINISHED SURFACE ELEV 129.20 (MIN)
TOP OF R-TANK SYSTEM 127.70 (MAX)
BOTTOM OF R-TANK SYSTEM 123.5 (MAX)
BED MATERIAL ELEV 123.17 (MAX)
SEASONAL HIGH WATER ELEV BELOW 118

R-TANK UNITS	
TRIPLE UNITS SIZE	15.75"W x 28.15"L x 50.39"H
TANK VOLUME	12.93 CU FT
STORAGE VOLUME	12.28 CU FT
NUMBER OF UNITS	250
PATTERN FOR UNITS	5 X 50
TOTAL STORAGE VOLUME	3070 CU FT
VOLUME AT WEIR ELEVATION	2740 CU FT

SIDE VIEW (NTS)

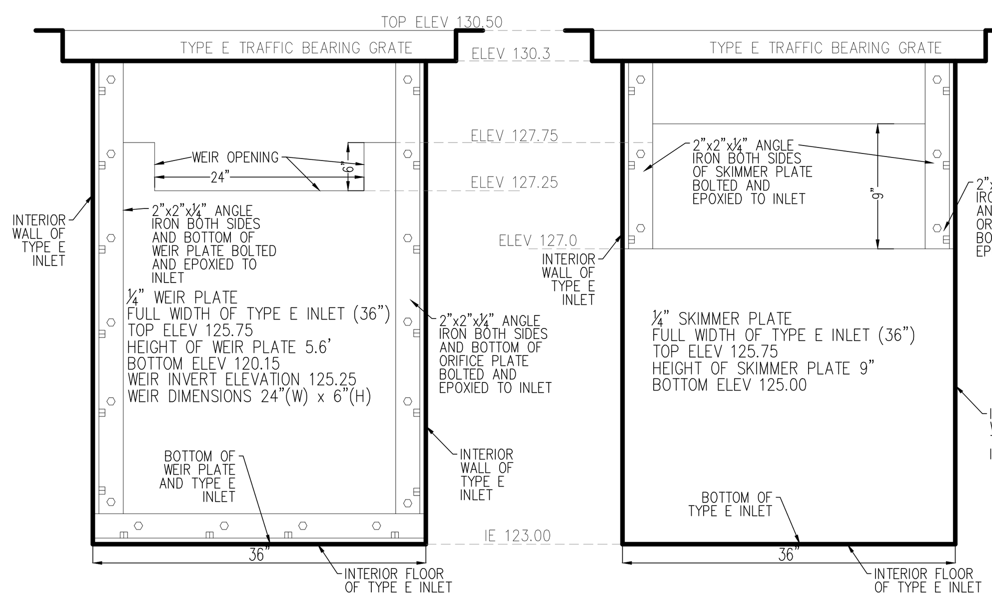

ORIFICE PLATE (NTS) SKIMMER PLATE (NTS)

EAST DISCHARGE STRUCTURE

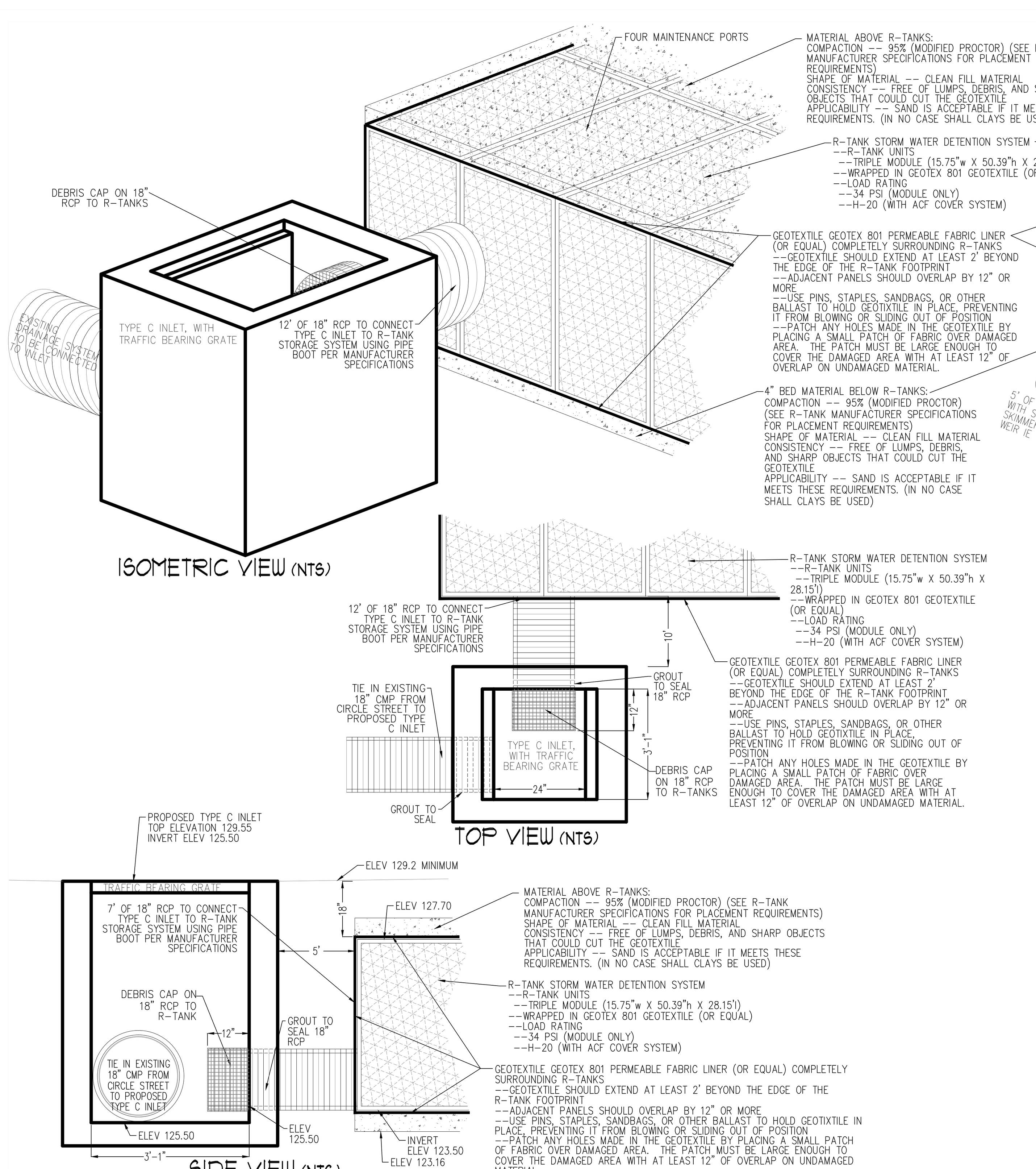

EAST INLET STRUCTURE INTO RETENTION NTS

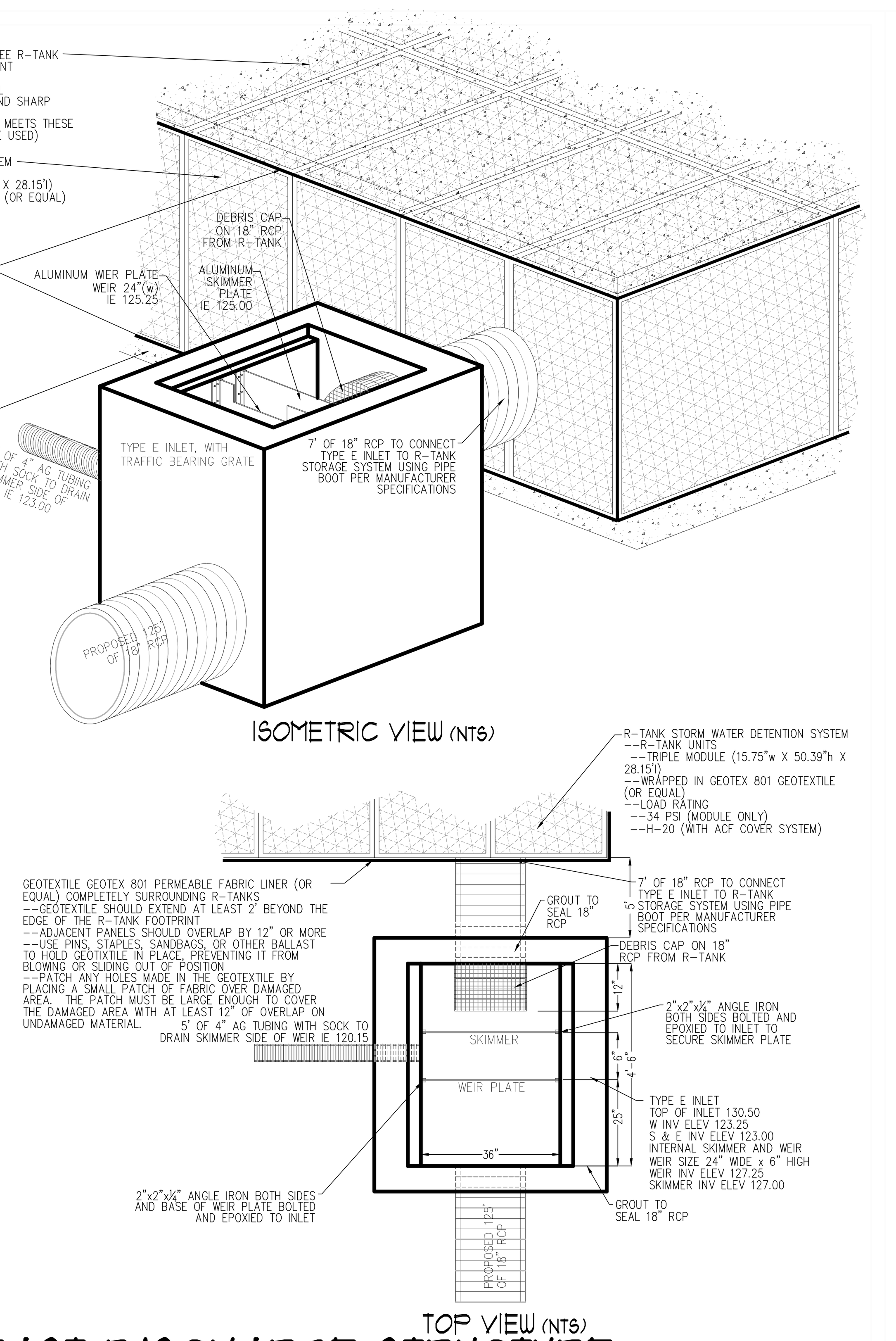

EAST DISCHARGE STRUCTURE (ISOMETRIC VIEW) (NTS)

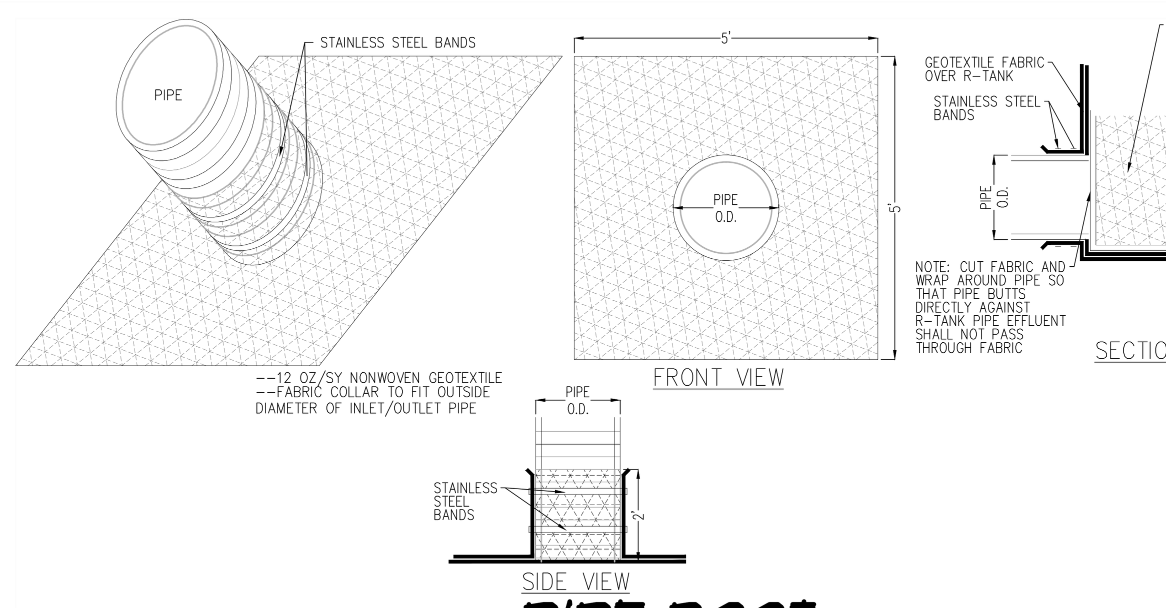

PIPE BOOT (NTS)

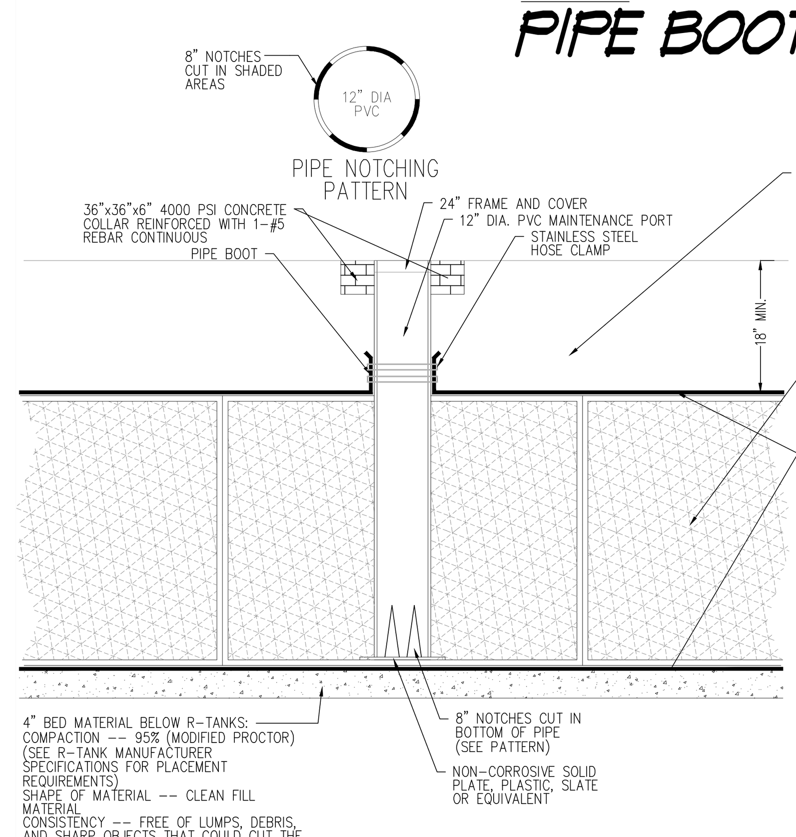

MAINTENANCE PORT
THIS PORT IS USED TO PUMP WATER INTO THE SYSTEM AND RE-SUSPEND ACCUMULATD SEDIMENT SO THAT IT MAY BE PUMPED OUT. MINIMUM REQUIRED MAINTENANCE INCLUDES A QUARTERLY INSPECTION DURING THE FIRST YEAR OF OPERATION AND A YEARLY INSPECTION THEREAFTER, FLUSH AS NEEDED.

MATERIAL ABOVE R-TANKS:
COMPACTION -- 95% (MODIFIED PROCTOR) (SEE R-TANK MANUFACTURER SPECIFICATIONS FOR PLACEMENT REQUIREMENTS)
SHAPE OF MATERIAL -- CLEAN FILL MATERIAL
CONSISTENCY -- FREE OF LUMPS, DEBRIS, AND SHARP OBJECTS THAT COULD CUT THE GEOTEXTILE
APPLICABILITY -- SAND IS ACCEPTABLE IF IT MEETS THESE REQUIREMENTS. (IN NO CASE SHALL CLAYS BE USED)

R-TANK STORM WATER DETENTION SYSTEM
--R-TANK UNITS
--TRIPLE MODULE (15.75"w X 50.39"h X 28.15'l)
--WRAPPED IN GEOTEX 801 GEOTEXTILE (OR EQUAL)
--LOAD RATING
--34 PSI (MODULE ONLY)
--H-20 (WITH ACF COVER SYSTEM)

GEOTEXTILE GEOTEX 801 PERMEABLE FABRIC LINER (OR EQUAL) COMPLETELY SURROUNDING R-TANKS
--GEOTEXTILE SHOULD EXTEND AT LEAST 2' BEYOND THE EDGE OF THE R-TANK FOOTPRINT
--ADJACENT PANELS SHOULD OVERLAP BY 12" OR MORE
--USE PINS, STAPLES, SANDBAGS, OR OTHER BALLAST TO HOLD GEOTIXTILE IN PLACE, PREVENTING IT FROM BLOWING OR SLIDING OUT OF POSITION
--PATCH ANY HOLES MADE IN THE GEOTEXTILE BY PLACING A SMALL PATCH OF FABRIC OVER DAMAGED AREA. THE PATCH MUST BE LARGE ENOUGH TO COVER THE DAMAGED AREA WITH AT LEAST 12" OF OVERLAP ON UNDAMAGED MATERIAL.

MAINTENANCE
THE R-TANK SYSTEM SHOULD BE BACK-FLUSHED ONCE SEDIMENT ACCUMULATION HAS REACHED 6" OR 15% OF THE TOTAL SYSTEM HEIGHT.
--FOR SINGLE R-TANK (HEIGHT - 18") UNIT, MAXIMUM SEDIMENT DEPTH 3".
FOR DOUBLE R-TANK (HEIGHT - 35") UNIT, MAXIMUM SEDIMENT DEPTH 5".
--BEFORE ANY MAINTENANCE IS PERFORMED ON YOU SYSTEM, BE SURE TO PLUG THE OUTLET PIPE TO PREVENT CONTAMINATION OF THE ADJACENT SYSTEMS.
--TO BACK-FLUSH THE R-TANK, WATER IS PUMPED INTO THE SYSTEM THROUGH THE MAINTENANCE PORTS AS RAPIDLY AS POSSIBLE. WATER SHOULD BE PUMPED INTO ALL MAINTENANCE PORTS. THE TURBULENT ACTION OF THE WATER MOVING THROUGH THE R-TANK WILL SUSPEND SEDIMENTS WHICH MAY THEN BE PUMPED OUT.

INSPECTION
1. REMOVE CAP
2. USE FLASHLIGHT TO DETECT SEDIMENT DEPOSITS
3. IF PRESENT, MEASURE SEDIMENT DEPTH WITH STADIA ROD
4. RECORD RESULTS ON A MAINTENANCE LOG
5. REPLACE CAP
6. REPEAT FOR ALL MAINTENANCE PORTS

MAINTENANCE
1. PLUG SYSTEM OUTLET TO PREVENT DISCHARGE OF BACK-FLUSH WATER
2. DETERMINE BEST LOCATION TO PUMP OUT BACK-FLUSH WATER
3. REMOVE CAP FROM MAINTENANCE PORT
4. PUMP WATER AS RAPIDLY AS POSSIBLE (WITHOUT OVER-TOPPING PORT) INTO SYSTEM UNTIL AS LEAST 1" OF WATER COVERS SYSTEM BOTTOM
5. REPLACE CAP
6. REPEAT AT ALL MAINTENANCE PORTS
7. PUMP OUT BACK-FLUSH WATER TO COMPLETE BACK-FLUSHING
8. VACUMM ALL ADJACENT STRUCTURE AND ANY OTHER STRUCTURES OR STORMWATER PRE-TREATMENT SYSTEMS THAT REQUIRE ATTENTION.
9. SEDIMENT-LADEN WATER MAY BE CAPTURE FOR DISPOSAL OR PUMPED THROUGH A DIRTBAG.
10. REPLACE ANY REMAINING CAPS OR COVERS
11. RECORD THE BACK-FLUSHING EVENT IN YOUR MAINTENANCE LOG WITH ANY RELEVANT SPECIFICS

MAINTENANCE PORT (NTS)

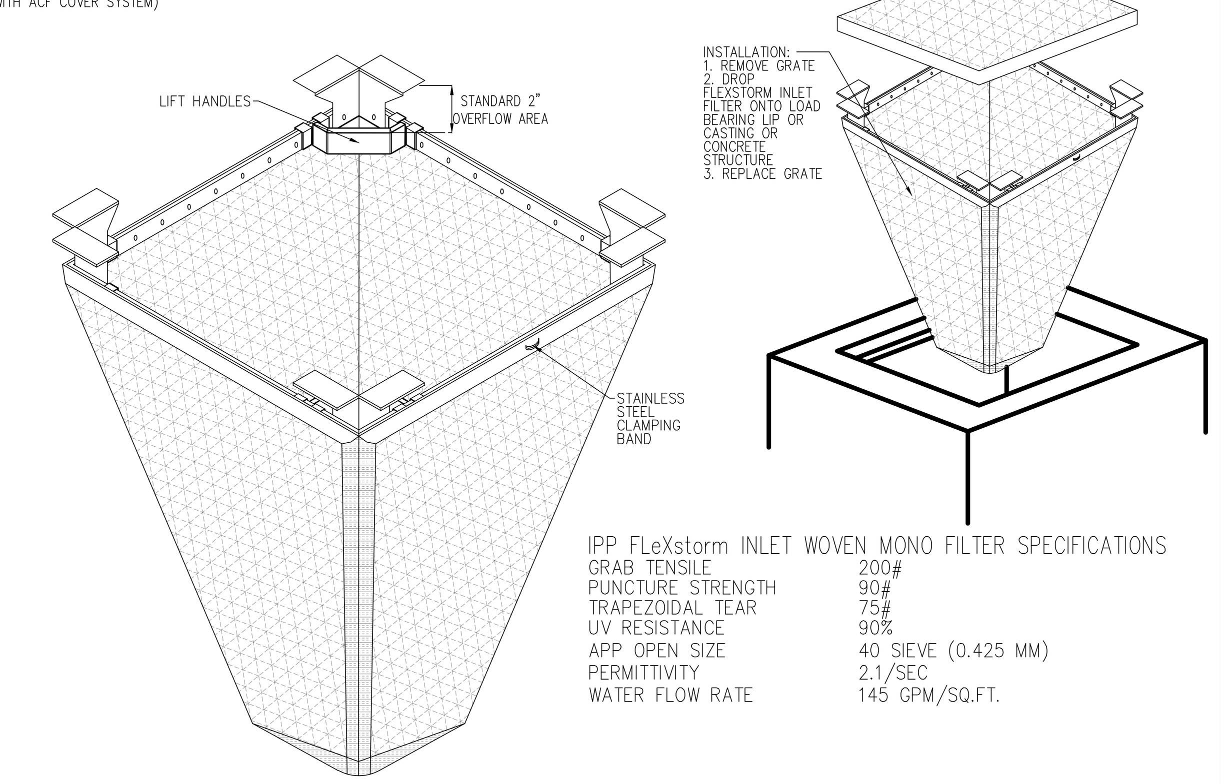

IPP FLeXstorm INLET WOVEN MONO FILTER SPECIFICATIONS	
GRAB TENSILE	200#
PUNCTURE STRENGTH	90#
TRAPEZOIDAL TEAR	75#
UV RESISTANCE	90%
APP OPEN SIZE	40 SIEVE (0.425 MM)
PERMITTIVITY	2.1/SEC
WATER FLOW RATE	145 GPM/SQ.FT.

IPP FLeXstorm INLET FILTER IN INLETS ALONG CIRCLE STREET (NTS)

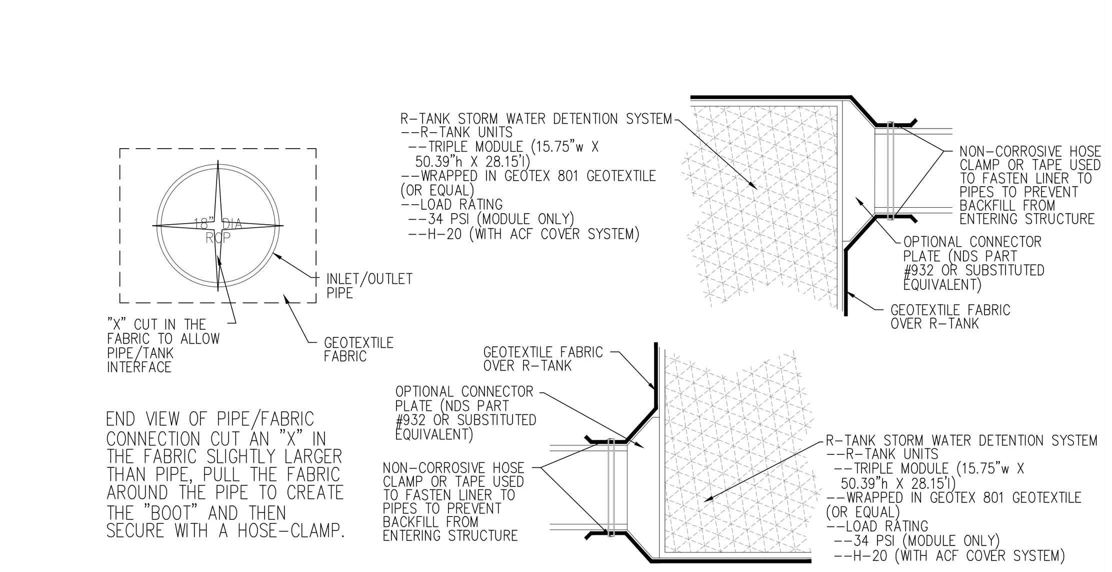

END VIEW OF PIPE/FABRIC CONNECTION CUT AN "X" IN THE FABRIC SLIGHTLY LARGER THAN PIPE, PULL THE FABRIC AROUND THE PIPE TO CREATE THE "BOOT" AND THEN SECURE WITH A HOSE-CLAMP.

INLET/OUTLET PIPE CONNECTIONS (NTS)

DATE	REMARK	DR	CH
14-NOV-13	INITIAL SUBMITTAL	MLW	

JOB # 13001
SCALE 1"=50'

APPROVED BY: NOT VALID WITHOUT ORIGINAL SIGNATURE AND RAISED SEAL
SEAL
SIGNED:
DATE:

2925 KENILWORTH BLVD.,
SEBRING, FLORIDA 33870
863-385-5564 PHONE
863-385-2462 FAX
CERTIFICATE OF AUTHORIZATION # 5684
ROGER DALE POLSTON P. E. # 33222
MARVIN LUTHER WOLFE P.E. # 46030
CLINTON E. HOWERTON JR. P.E. # 61021
Polston Engineering Inc.
CIVIL ENGINEERING CONSULTANTS

LAKE VERONA NORTHWEST BASIN
BEST MANAGEMENT PRACTICES PROJECT
RAINTANK HD DETAILS

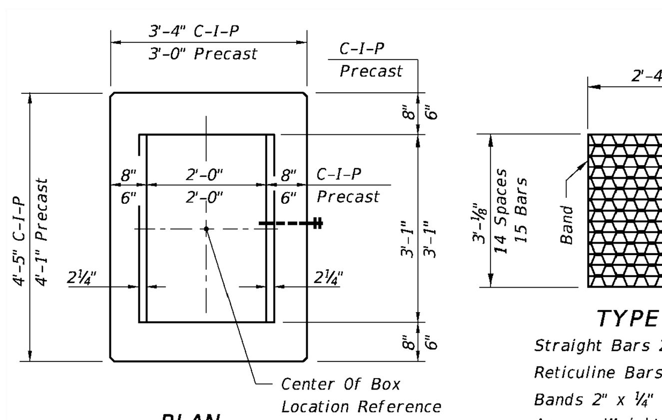

PLAN

TYPE C

Straight Bars 2"x ¼"
Reticuline Bars 1¼" x 3⁄16"
Bands 2" x ¼"
Approx. Weight 104 Lbs.

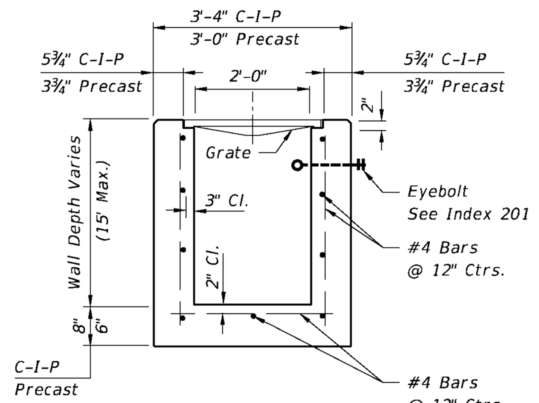

SECTION

HORIZONTAL WALL REINFORCING SCHEDULES (TABLE 1)

WALL DEPTH	SCHEDULE	AREA (in.²/ft.)	MAX. SPACING BARS	MAX. SPACING WWF
0'-15'	A12	0.20	12"	8"

TYPE C

Recommended Maximum Pipe Size:

2'-0" Wall - 18" Pipe
3'-1" Wall - 24" Pipe (18" where an 18" pipe enters a 2'-0" wall)

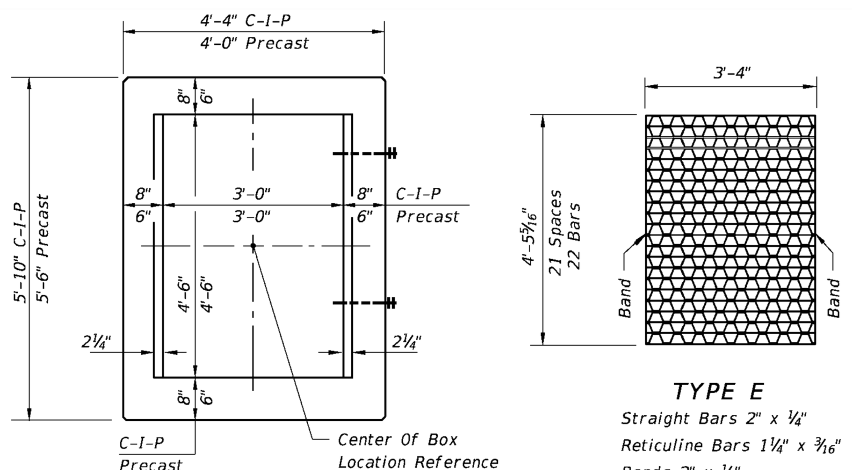

PLAN

TYPE E

Straight Bars 2" x ¼"
Reticuline Bars 1¼" x 3⁄16"
Bands 2" x ¼"
Approx. Weight 215 Lbs.

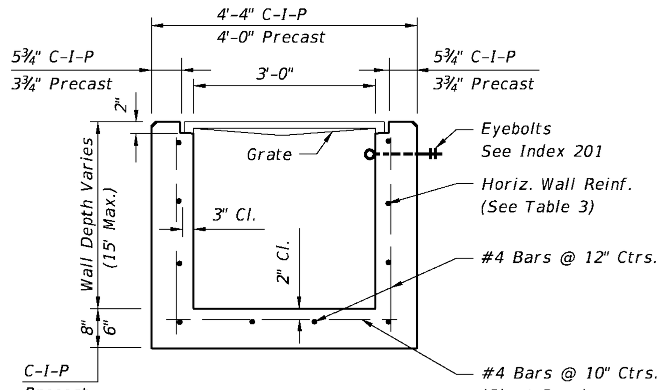

SECTION

HORIZONTAL WALL REINFORCING SCHEDULES (TABLE 3)

WALL DEPTH	SCHEDULE	AREA (in.²/ft.)	MAX. SPACING BARS	MAX. SPACING WWF
0'-5'	A12	0.20	12"	8"
0'-7.5'	A6	0.20	6"	5"
7.5'-10'	B5.5	0.24	5½"	5"
10'-15'	C6.5	0.37	6½"	6"

TYPE E

Recommended Maximum Pipe Size:

3'-0" Wall - 24" Pipe
4'-6" Wall - 36" Pipe

DITCH BOTTOM INLET TYPES C, D, E AND H

FDOT 2014 DESIGN STANDARDS	INDEX NO. 232	SHEET NO. 1 of 7

1. These inlets are suitable for bicycle traffic and are to be used in ditches, medians and other areas subject to infrequent traffic loadings but are not to be placed in areas subject to any heavy wheel loads. These inlets may be placed in areas subject to occasional pedestrian traffic such as landscaped areas and pavement areas where pedestrians can walk around the inlet.

2. Inlets subject to minimal debris should be constructed without slots. Where debris is a problem inlets should be constructed with slots. Slotted inlets located within roadway clear zones and areas subject to pedestrians shall have traversable slots. The traversable slot modification is not adaptable to inlet Type H. Slots may be constructed at either or both ends as shown on plans. Traversable slots shall not be used in areas subject to occasional bicycle traffic.

3. Steel grates are to be used on all inlets where bicycle traffic is anticipated. Steel grates are to be used on all inlets with traversable slots. Either cast iron or steel grates may be used on inlets without slots where bicycle traffic is not anticipated. Either cast iron or steel grates may be used on all inlets with non-traversable slots. Subject to the selection described above, when Alternate G grate is specified in the plans, either the steel grate, hot dip galvanized after fabrication, or the cast iron grate may be used, unless the plans stipulate the particular type.

4. Recommended maximum pipe sizes shown are for concrete pipe. Size for other types of pipe must be checked for fit.

5. All exposed edges and corners shall be ¾" chamfer or tooled to ¼" radius.

6. Concrete inlet pavement to be used on inlets without slots and inlets with non-traversable slots only when called for in the plans; but required on all traversable slot inlets. Cost to be included in contract unit price for inlets. Quantities shown are for information only.

7. Traversable slots constructed in existing inlets shall be paid for as inlets partial. For conversion work and method of payment see 'TRAVERSABLE SLOT INLETS (PARTIAL) FOR EXISTING INLETS'.

8. Sodding to be used on all inlets not located in paved areas and paid for under contract unit price for Performance Turf, SY.

9. For supplementary details see Index No. 201.

10. All reinforcing is Grade 60 bars with 2" min. cover unless otherwise noted. Bars to be cut or bent for 1½" clearance around pipe opening. Provide one additional #4 bar above and at each side of pipe opening.

DITCH BOTTOM INLET TYPES C, D, E AND H

FDOT 2014 DESIGN STANDARDS	INDEX NO. 232	SHEET NO. 3 of 7

DIMENSIONS & QUANTITIES

D	X	A	B	C	E	F	G	H ■	M Single Pipe	M Double Pipe	M Triple Pipe	M Quad Pipe	N	GRATE SIZES Standard Weight Pipe	GRATE SIZES Extra Strong Pipe	CONCRETE (CY) Single Pipe	CONCRETE (CY) Double Pipe	CONCRETE (CY) Triple Pipe	CONCRETE (CY) Quad Pipe	SODDING (SY) Single Pipe	SODDING (SY) Double Pipe	SODDING (SY) Triple Pipe	SODDING (SY) Quad Pipe
15"	2'-7"	2.27'	4.09'	6.36'	4.03'	8'	1.22'	4.0'	4.63'	7.21'	9.79'	12.37'	1.19'			0.76	1.16	1.54	1.94	8	10	11	12
18"	2'-10"	2.36'	5.12'	7.48'	5.03'	9'	1.41'	4.0'	4.92'	7.75'	10.58'	13.42'	1.21'			0.85	1.28	1.71	2.17	9	10	12	13
24"	3'-5"	2.53'	7.18' △	9.71'	7.03' △	11'	1.73'	4.0'	5.50'	8.92'	12.33'	15.75'	1.25'			1.02	1.58	2.15	2.75	10	12	13	15
30"	4'-3"	2.70'	9.25'	11.95'	9.03'	13'	2.00'	4.0'	6.08'	10.33'	14.58'	18.83'	1.29'	2½"	3"	1.23	1.98	2.74	3.50	12	14	15	17
36"	5'-1"	2.87'	11.31' ◇	14.18'	11.03' ◇	15'	2.24'	4.0'	6.67'	11.75'	16.83'	21.92'	1.33'	2½"	3"	1.40	2.38	3.33	4.24	13	15	17	20
42"	6'-0"	3.05'	13.37'	16.42'	13.03'	17'	2.45'	4.0'	7.25'	13.25'	19.25'	25.25'	1.38'	2½"	3½"	1.60	2.83	4.04	5.26	14	17	19	22
48"	6'-9"	3.22'	15.43'	18.65'	15.03'	19'	2.65'	4.0'	7.83'	14.58'	21.33'	28.08'	1.42'	2½"	3½"	1.81	3.26	4.70	6.14	15	18	21	24
54"	7'-8"	3.39'	17.49'	20.88'	17.03'	21'	2.83'	4.0'	8.42'	16.08'	23.75'	31.42'	1.46'	3"	4"	2.03	3.78	5.54	7.28	17	20	23	27
60"	8'-6"	3.56'	19.55'	23.11'	19.03'	23'	3.00'	4.0'	9.00'	17.50'	26.00'	34.50'	1.50'	3"	4"	2.28	4.36	6.43	8.50	18	22	25	29

△ 6.42' △ 6.25' Dimensions permitted to allow use of 8' standard pipe lengths.
◇ 10.40' ◇10.10' Dimensions permitted to allow use of 12' standard pipe lengths.
△ ◇ Concrete slab shall be deepened to form bridge across crown of pipe. See section below.
■ Values shown for estimating pipe quantities and are for information only.

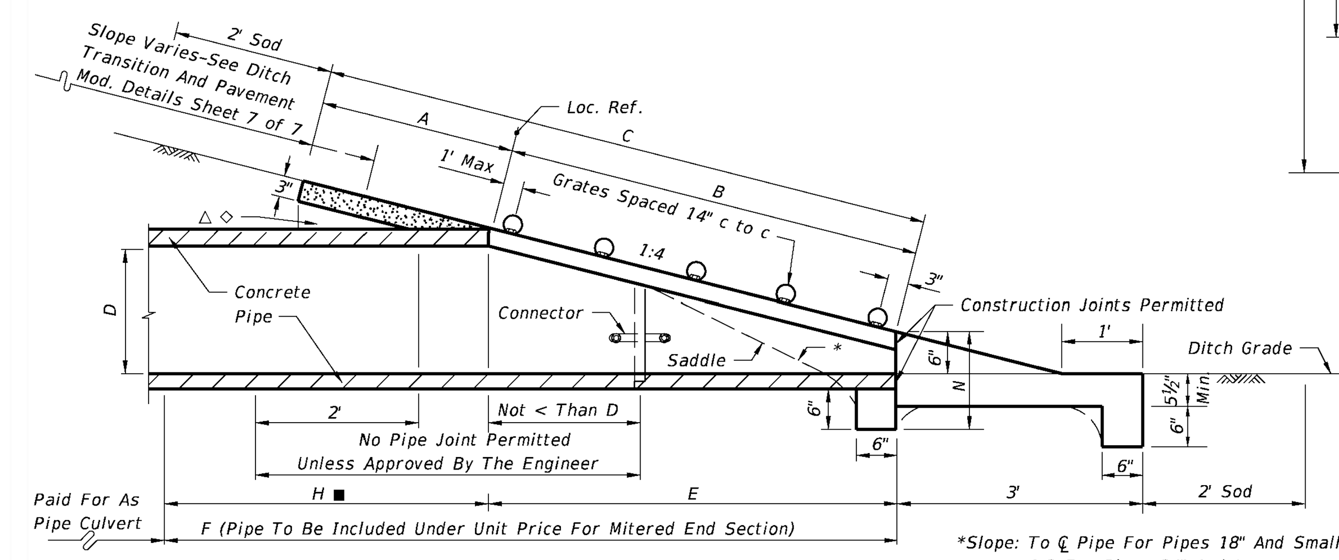

*Slope: To ℄ Pipe For Pipes 18" And Smaller
1:2 For Pipes 24" And Larger.

SECTION

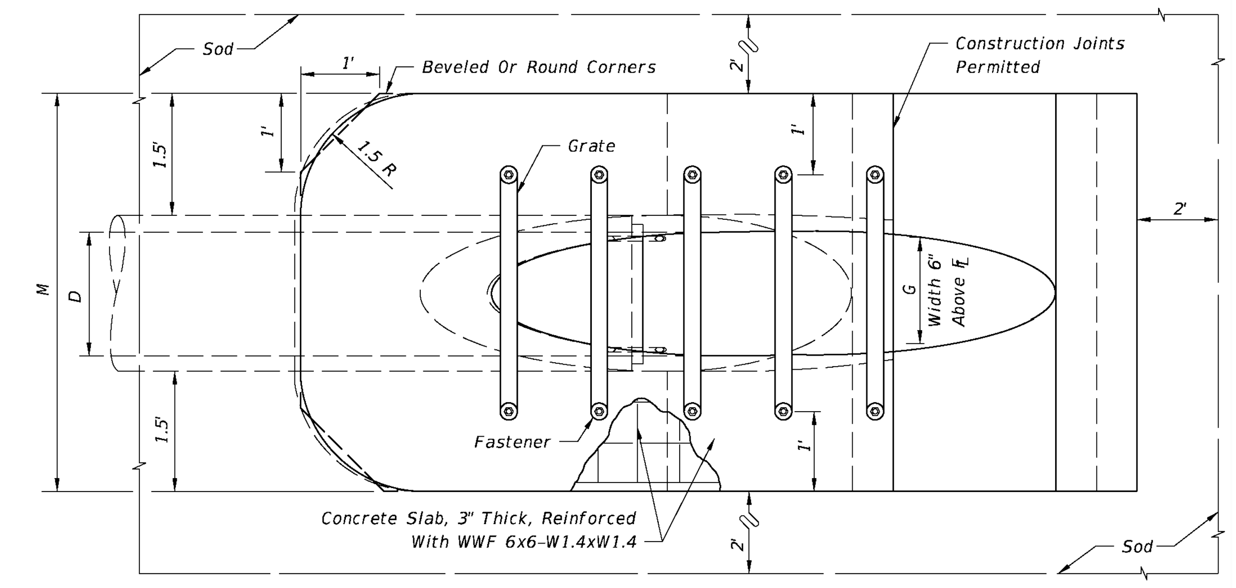

TOP VIEW-SINGLE PIPE

Note: See Sheets 6 and 7 for details and general notes.

SINGLE AND MULTIPLE ROUND CONCRETE PIPE

SIDE DRAIN MITERED END SECTION

FDOT 2014 DESIGN STANDARDS	INDEX NO. 273	SHEET NO. 1 of 7

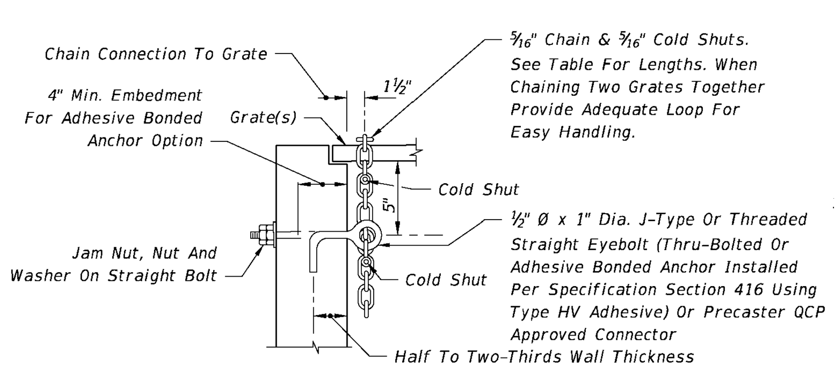

NOTE: When Alternate "G" grate is specified, the chain, bolt, nuts, washer and cold shuts shall be galvanized in accordance with Section 425 of the Standard Specifications.

EYEBOLT AND CHAIN REQUIREMENTS

Index Number	Inlet Type	Eye-Bolts	Length Of Chain	Handling & Remarks
217	(MB) 1	1	4'-0"	Slide & Spin
	(MB) 2	1	4'-0"	Slide & Spin
	(MB) 3	2	2 @ 4'-0"	Slide & Spin
	(MB) 4	2	2 @ 4'-0"	Slide & Spin
	(MB) 5	2	2 @ 4'-0"	Slide & Spin
218	(BW)	1	3'-8"	Slide Or Slide & Spin
219	(BW, RGD)	1	4'-0"	Slide & Spin
220	S	1	4'-0"	Slide & Spin
221	V	1	4'-0"	Slide & Spin
230	A	1	3'-0"	Slide
231	B	1	5'-0"	Slide & Spin
232	C	1	2'-6"	Slide & Spin
	D	1	2'-6"	Slide & Spin
	E	2	2 @ 2'-6"	Slide & Spin
	H	2	2 @ 2'-6"	Flip Ctr. Grate and Slide & Spin Single Free Grate
			1 or 2 @ 1'-6"	Ctr. Grate(s) Chained To One End Grate
233	F	1	3'-6"	Flip Or Slide & Spin
	G	1	6'-0"	Slide
			2'-0"	Lifting Loop
234	J	1	4'-0"	Slide & Spin

EYEBOLT AND CHAIN FOR LOCKING GRATES TO INLETS

SUPPLEMENTARY DETAILS FOR MANHOLES & INLETS

FDOT 2014 DESIGN STANDARDS	INDEX NO. 201	SHEET NO. 2 of 5

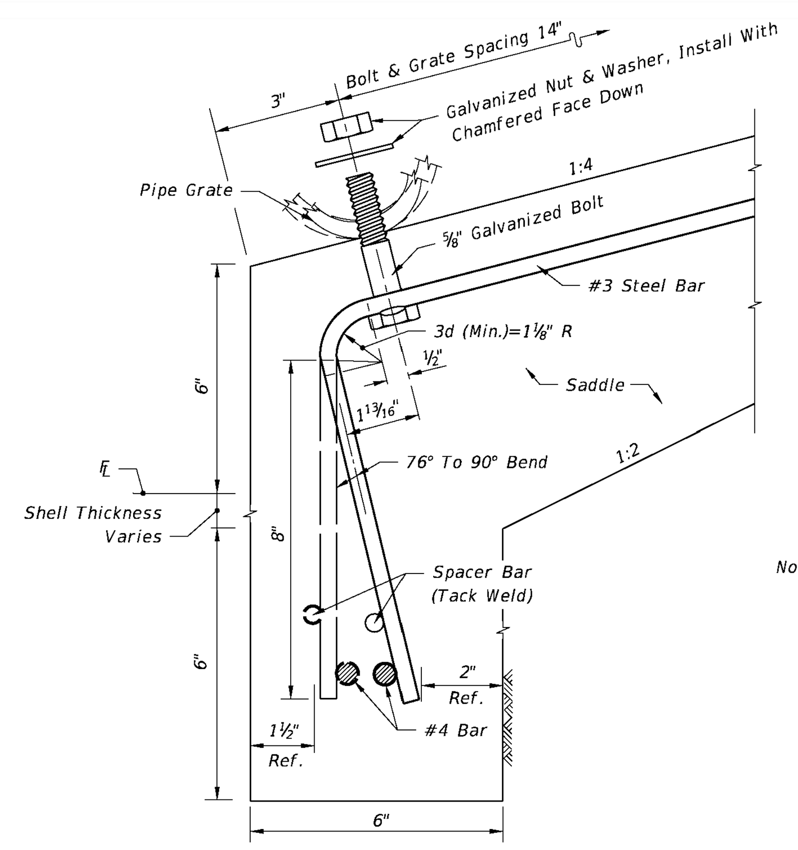

Drain Size	s	n	L	La

CONCRETE PIPE (ROUND)

Drain Size	s	n	L	La
15"	3	4	4'-0"	4'-11"
18"	4	5	5'-2"	6'-1"
24"	6	7	7'-6"	8'-5"
30"	7	8	8'-8"	9'-7"
36"	9	10	11'-0"	11'-11"
42"	11	12	13'-4"	14'-3"
48"	13	14	15'-8"	16'-7"
54"	14	15	16'-10"	17'-9"
60"	16	17	19'-2"	20'-1"

** To be used only when grates are called for in the plans.

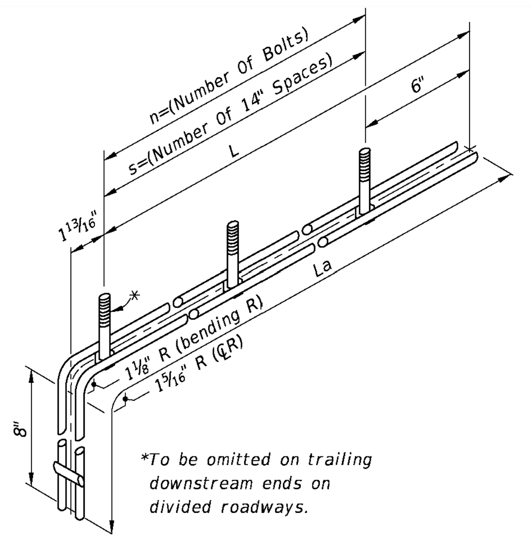

*To be omitted on trailing downstream ends on divided roadways.

Note: ⅝" x 3" bolts are standard for all grate fasteners, except when the contractor elects to use the slotted upper holes for the intermediate fasteners on multiple drain pipes, which will require the following bolt lengths:

Grate Size (Std. & X-Stg.)	Bolt Length
2½"	5½"
3"	6"
3½"	6½"
4"	7"

⅝" Galvanized Bolt Hex Head Bolt Shown; Either Hex Head Or Square Head Bolt May Be Used. Only Hex Nut To Be Used.

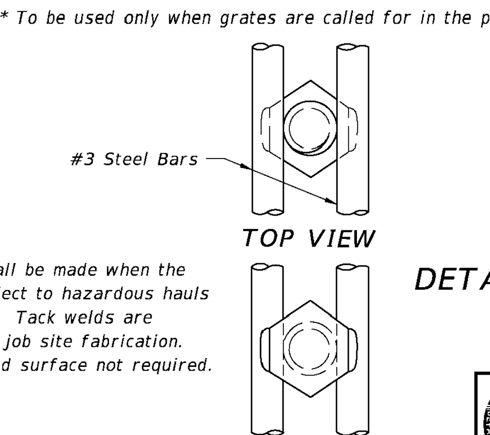

TOP VIEW

BOTTOM VIEW

The specified weld shall be made when the fabricated unit is subject to hazardous hauls and repeated handling. Tack welds are permitted for local or job site fabrication. Galvanizing over welded surface not required.

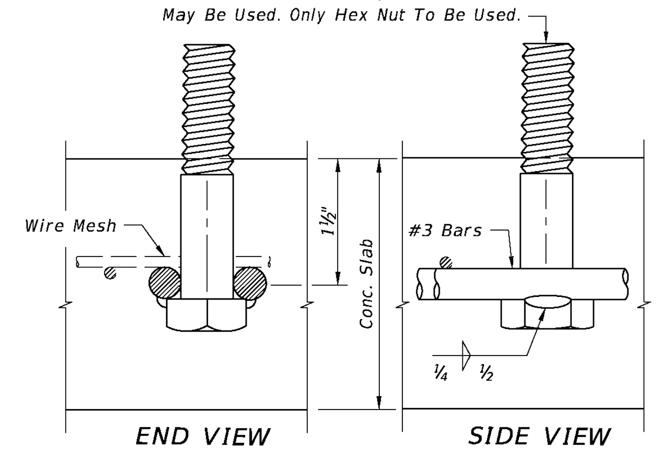

END VIEW SIDE VIEW

FOR ALL SIZES OF SINGLE AND MULTIPLE DRAIN PIPE FASTENER UNIT

DETAILS FOR CONCRETE & CORRUGATED METAL PIPE

SIDE DRAIN MITERED END SECTION

FDOT 2014 DESIGN STANDARDS	INDEX NO. 273	SHEET NO. 5 of 7

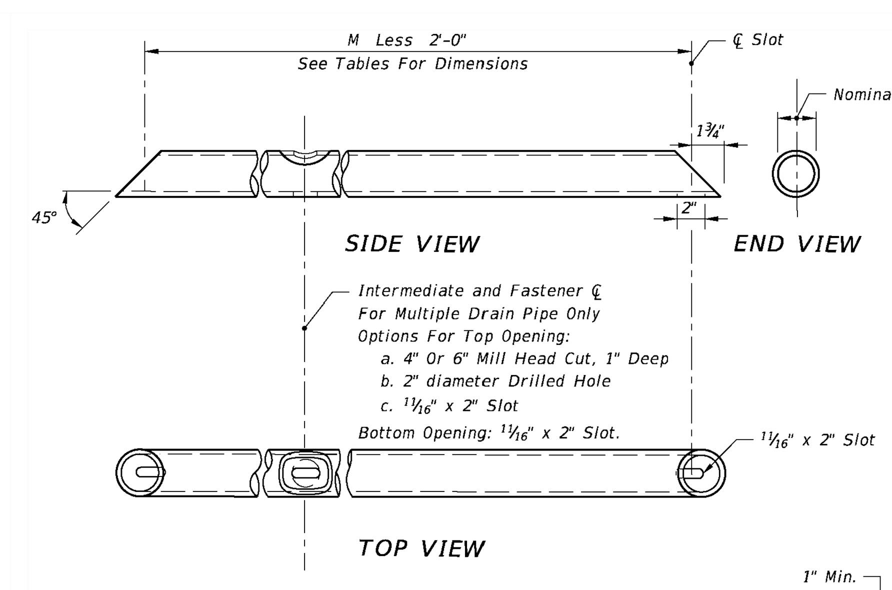

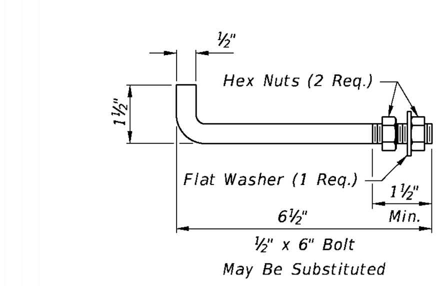

Notes:
Anchors required for CMP only.
Anchor, washer and nuts to be galvanized steel.
Bend anchor where required to center in concrete slab.
Damaged surfaces to be repaired after bending.
Anchors are to be spaced a distance equal to four (4) corrugations.
Place the anchors in the outside crest of corrugation.
Flat washer to be placed on inside wall of pipe.
Holes in the mitered end pipe are to be drilled or punched; burning not permitted.

ANCHOR DETAIL

FOR SINGLE & MULTIPLE DRAIN PIPE
GRATE DETAIL

See General Notes, Sheet 7.

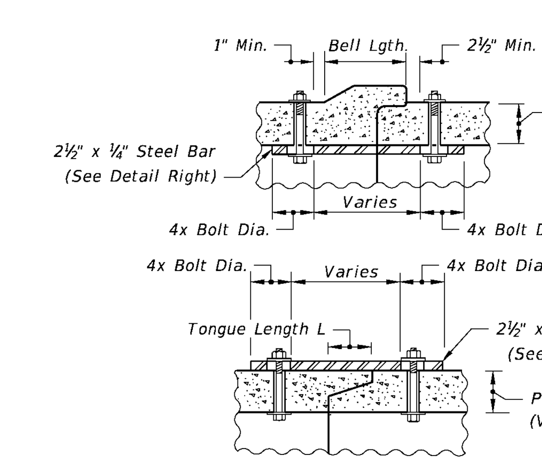

CONCRETE PIPE CONNECTOR DETAIL

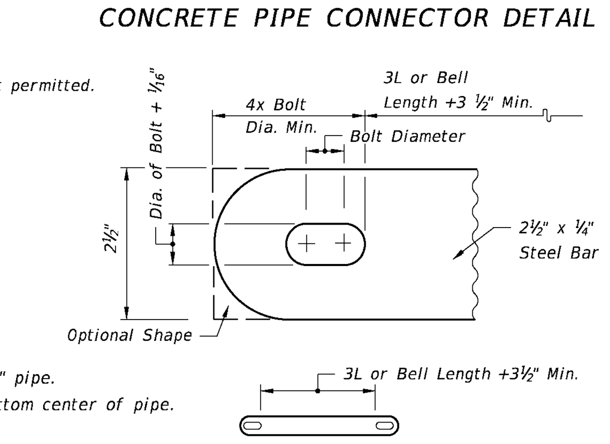

All bars, bolts, nuts and washers are to be galvanized steel.
Bolt diameters shall be ⅜" for 15" to 36" pipe and ⅝" for 42" to 60" pipe.
Two connectors required per joint, located 60° right and left of bottom center of pipe.
Bolt holes in pipe shell are to be drilled.

DETAILS FOR CONCRETE & CORRUGATED METAL PIPE

SIDE DRAIN MITERED END SECTION

FDOT 2014 DESIGN STANDARDS	INDEX NO. 273	SHEET NO. 6 of 7

GENERAL NOTES

1. Unless otherwise designated in the plans, concrete pipe mitered end sections may be used with any type of side drain pipe; corrugated steel pipe mitered end sections may be used with any type of side drain pipe except aluminum pipe; and, corrugated aluminum mitered end sections may be used with any type of side drain pipe except steel pipe. When bituminous coated metal pipe is specified for side drain pipe, mitered end sections shall be constructed with like pipe or concrete pipe. When the mitered end section pipe is dissimilar to the side drain pipe, a concrete jacket shall be constructed in accordance with Index No. 280.

2. Corrugated polyethylene pipe (HDPE), polyvinyl-chloride pipe (PVC) and polypropylene pipe (PPP) for side drain applications shall utilize either corrugated metal or concrete mitered end sections (MES). When used in conjunction with corrugated (MES), connection shall be by either a formed metal band specifically designated to join HDPE or PVC pipe, with metal pipe or other coupler approved by the State Drainage Engineer. When used in conjunction with a concrete (MES), connection shall be by concrete jacket constructed in accordance with Index No. 280.

3. Concrete pipe used in the assembly of mitered end sections shall be of selective lengths to avoid excessive connections.

4. Corrugated metal pipe galvanizing that is damaged during beveling and perforating for mitered end section shall be repaired.

5. That portion of corrugated metal pipe in direct contact with the concrete slab and extending 12" beyond shall be bituminous coated prior to placing of the concrete.

6. When existing multiple side drain pipes are spaced other than the dimensions shown in this detail, or have nonparallel axes, or have non-uniform sections, The mitered end sections will be constructed either separately as single pipe mitered end sections or collectively as multiple pipe end sections as directed by the Engineer; however, mitered end sections will be paid for each, based on each independent pipe end.

7. In addition to the requirements of Section 430-4, side drain culverts shall comply with the cover requirements shown on Index No. 205.

8. The reinforced concrete slab shall be constructed for all sizes of side drain pipe and cast in place with Class NS concrete.

9. Round pipe size 30" or greater, pipe-arch size 35"x24" or greater and elliptical pipe 19"x30" or greater shall be grated unless excepted in the plans. Smaller sizes of pipe shall be grated only when called for in plans. The lower grate on trailing downstream ends on divided highways shall be omitted.

10. Grates are to be fabricated from steel ASTM A53, Grade B, pipe. The lower grate on all traffic approach ends shall be Schedule 80 and all remaining grates shall be Schedule 40. Grates subject to salt free and corrosive free environment may be fabricated from galvanized pipe, with base metal exposed during fabrication repaired as specified in Section 562, Standard Specifications; or, fabricated from black pipe and hot dip galvanized after fabrication in accordance with ASTM A123. Grates subject to salt water or highly corrosive environment shall be hot dip galvanized after fabrication in accordance with ASTM A123.

11. Ditch transitions shall be used on all grades in excess of 3% as directed by the Engineer.

12. The project engineer shall contact the District Drainage Engineer for possible alternate treatment prior to constructing side drain mitered end sections where a minimum spacing of 30' will not result between the toe points of the mitered end sections.

13. The cost of all pipe(s), grates, fasteners, reinforcing, connectors, anchors, concrete, sealants, jackets and coupling bands shall be included in the cost for the mitered end section. Sodding shall be paid for separately under the contract unit price for Performance Turf, SY.

14. Mitered end sections shall be paid for under the contract unit price for Mitered End Section (SD), Ea., based on each independent pipe end.

DESIGN NOTES

1. In critical hydraulic locations, grates shall not be used until potential debris transport has been evaluated by the drainage engineer and appropriate adjustments made. Ditch grades in excess of 3% or pipe with less than 1.5' of cover and grades in excess of 1% will require such an evaluation (General Note 9).

2. The design engineer shall determine highly corrosive locations and specify in the plans when the grates shall be hot-dip galvanized after fabrication (General Note 10).

3. The design engineer shall determine and designate in the plans which alternate types of mitered end section will not be permitted. The restriction shall be based on corrosive or structural requirements.

SIDE DRAIN MITERED END SECTION

FDOT 2014 DESIGN STANDARDS	INDEX NO. 273	SHEET NO. 7 of 7

DATE	REMARK	DR	CH
14-NOV-13	INITIAL SUBMITTAL	MLW	

JOB # 13001
SCALE 1"=NTS

APPROVED BY:
NOT VALID WITHOUT ORIGINAL SIGNATURE AND RAISED SEAL
SEAL
SIGNED:
DATE:

2925 KENILWORTH BLVD.,
SEBRING, FLORIDA 33870
863-385-5564 PHONE
863-385-2462 FAX
CERTIFICATE OF AUTHORIZATION # 5684
ROGER DALE POLSTON P. E. # 33222
MARVIN LUTHER WOLFE P.E. # 46030
CLINTON E. HOWERTON JR. P.E. # 61021
Polston Engineering Inc.
CIVIL ENGINEERING CONSULTANTS

LAKE VERONA NORTHWEST BASIN
BEST MANAGEMENT PRACTICES PROJECT
DETAILS

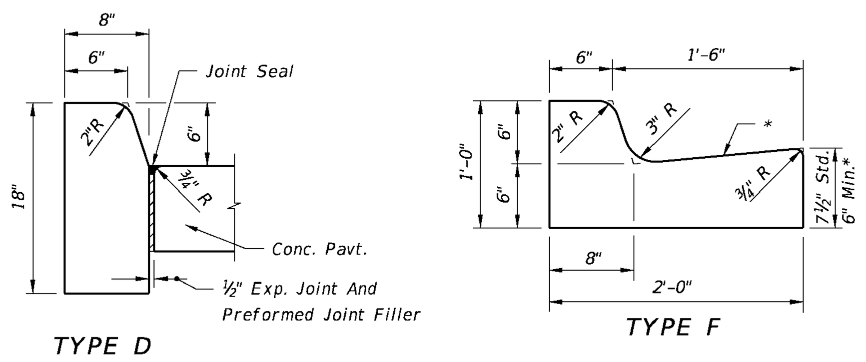

* When used on high side of roadways, the cross slope of the gutter shall match the cross slope of the adjacent pavement. The thickness of the lip shall be 6", unless otherwise shown on plans.

◪ Rotate entire section so that gutter cross slope matches slope of adjacent circulating roadway pavement.

For use adjacent to concrete or flexible pavement. For details depicting usage adjacent to flexible pavement, see Sheet 2. Expansion joint, preformed joint filler and joint seal are required between curb & gutter and concrete pavement only, see Sheet 2.

Note: For use adjacent to concrete or flexible pavement, concrete shown. Expansion joint, preformed joint filler and joint seal are required between curbs and concrete pavement only, see Sheet 2.

CONCRETE CURB AND GUTTER

CURB & CURB AND GUTTER

FDOT 2014 DESIGN STANDARDS	INDEX NO.	SHEET NO.
	300	1 of 2

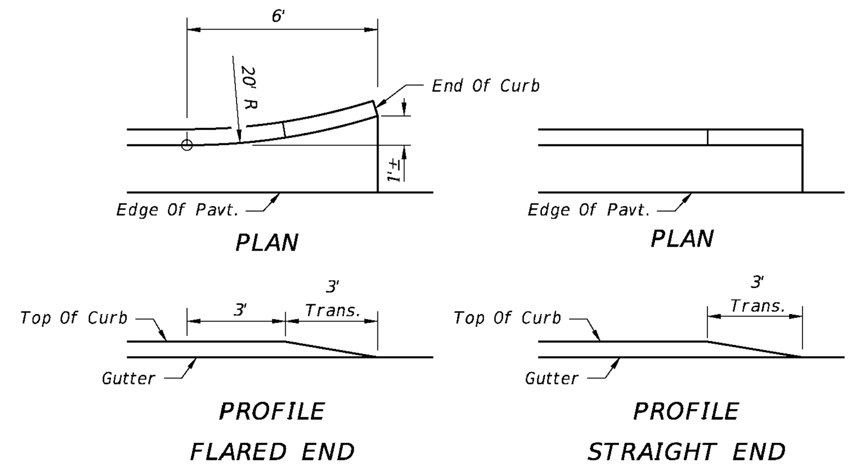

CURB AND GUTTER TYPES E & F

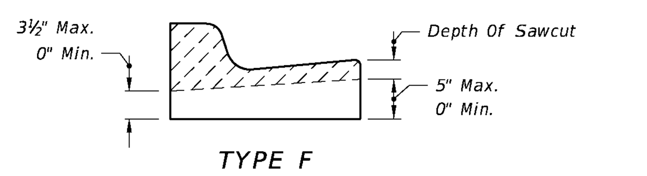

Sawcuts should be avoided within valley gutter and within curb and gutter endings.

CONTRACTION JOINT IN CURB AND GUTTER

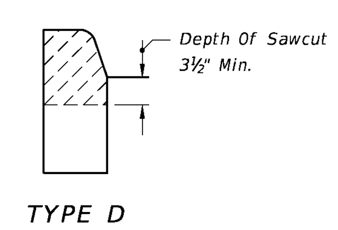

CONTRACTION JOINT IN CURB

GENERAL NOTES

1. For curb, gutter and curb & gutter provide 1/8" - 1/4" contraction joints at 10' centers (max.). Contraction joints adjacent to concrete pavement on tangents and flat curves are to match the pavement joints, with intermediate joints not to exceed 10' centers. Curb, gutter and curb & gutter expansion joints shall be located in accordance with Section 520 of the Standard Specifications.

2. Ends of Curbs Types B and D shall transition from full to zero heights in 3'.

CURB & CURB AND GUTTER

FDOT 2014 DESIGN STANDARDS	INDEX NO.	SHEET NO.
	300	2 of 2

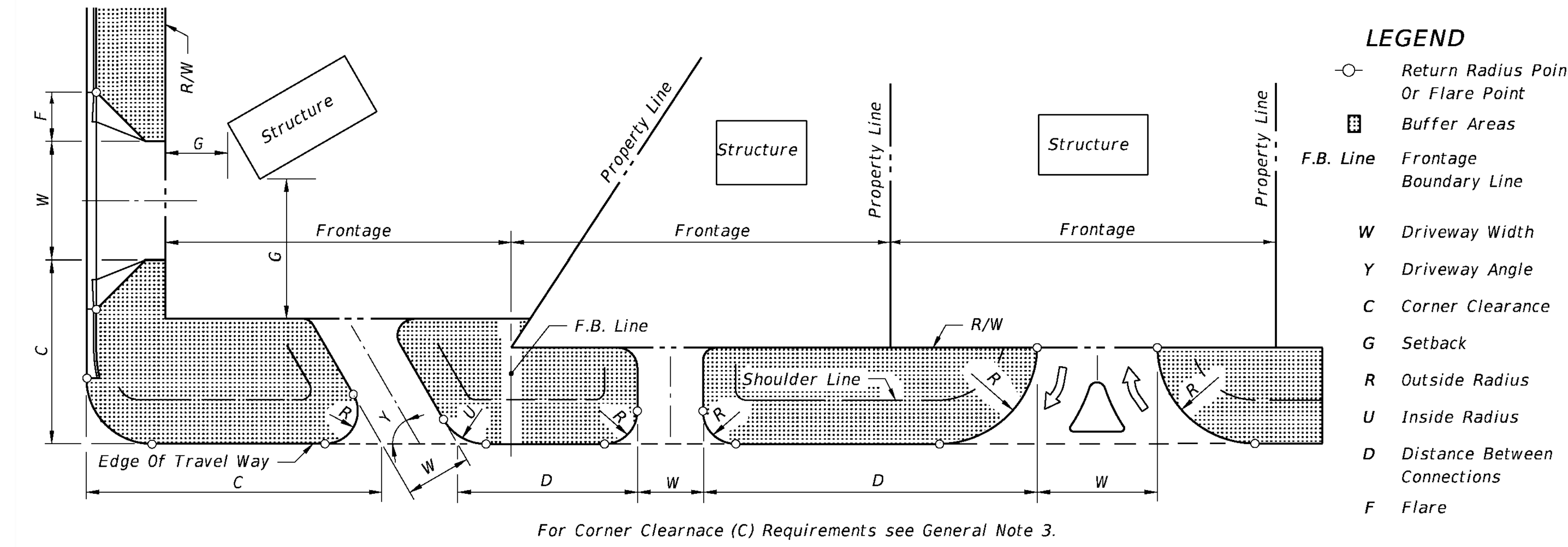

For Corner Clearnace (C) Requirements see General Note 3.

For Additional Information Refer To FDOT Rules Chapters 14-96 And 14-97.

SKETCH ILLUSTRATING DEFINITIONS

ELEMENT DESCRIPTION	URBAN (CURB & GUTTER) 1-20 Trips/Day or 1-5 Trips/Hour	URBAN 21-600 Trips/Day or 6-60 Trips/Hour, 2-Way ☐	URBAN 601-4000 Trips/Day ◪ or 61-400 Trips/Hour, 2-Way ☐	RURAL 1-20 Trips/Day or 1-5 Trips/Hour	RURAL 21-600 Trips/Day or 6-60 Trips/Hour, 2-Way ☐	RURAL 601-4000 Trips/Day ◪ or 61-400 Trips/Hour, 2-Way ☐
CONNECTION WIDTH W	12' Min. 24' Max.	24' Min. 36' Max. ☆	24' Min. 36' Max. ☆	12' Min. 24' Max.	24' Min. 36' Max. ☆	24' Min. 36' Max. ☆
FLARE (Drop Curb) F	10' Min.	10' Min.	N/A	N/A	N/A	N/A
RETURNS (Radius) R & U	N/A	△	25' Min. 50' Std. 75' Max.	15' Min. 25' Std. 50' Max.	25' Min. 50' Std. 75' Max.	25' Min. 50' Std. (Or 3-Centered Curves)
ANGLE OF DRIVE Y		60°-90°	60°-90°		60°-90°	60°-90°
DIVISIONAL ISLAND (Throat Median)		4'-22' Wide	4'-22' Wide		4'-22' Wide	4'-22' Wide
SETBACK G	12' Min., All categories. See General Note No. 5.					

◪ Side road intersection design, with possible auxiliary lanes and channelization, may be necessary. Intersection design, with possible auxiliary lanes and channelization, should be considered for connections with more than 4000 trips/days.
☐ "2-Way" refers to one "in" movement and one "out" movement i.e., not exclusive left or right turn lanes on the connection.
☆ When more than 2 lanes in the turnout connection are required, the 36' max. width may be increased to relieve interference between entering and exiting traffic which adversely affects traffic flow. These cases require documented site specific study and design.
△ Small radii may be used in lieu of flares as approved by the Department.
DESIGN NOTE: 1-Way connections will be designed to effectively eliminate unpermitted movements.

NOT INTENDED FOR FULL INTERSECTION DESIGN
SUMMARY OF GEOMETRIC REQUIREMENTS FOR TURNOUTS

TURNOUTS

FDOT 2014 DESIGN STANDARDS	INDEX NO.	SHEET NO.
	515	1 of 7

GENERAL NOTES

1. For definitions and descriptions of access connection "Categories" and access "Classifications" of highway segments, and for other detailed information on access to the State Highway System, refer to FDOT Rule Chapter 14-96, "State Highway Connection Permits Administrative Process" and Rule Chapter 14-97, "State Highway System Access Management Classification System And Standards."

2. For this index the term 'turnout' applies to that portion of driveways or side roads adjoining the outer roadway. For this index the term 'connection' encompasses a driveway or side road and their appurtenant islands, separators, transition tapers, auxiliary lanes, travelway flares, drainage pipes and structures, crossovers, sidewalks, curb cut ramps, signing, pavement marking, required signalization, maintenance of traffic or other means of access to or from controlled access facilities. The turnout requirements set forth in this index do not provide complete intersection design, construction or maintenance requirements.

3. The location, positioning, orientation, spacing and number of connections and median openings shall be in conformance with FDOT Rule Chapter 14-97.

4. On Department construction projects all driveways not shown on the plans shall be reconstructed at their existing location in conformance to these standards, or, in conformance to permits issued during the construction project.

5. Driveways shall have sufficient length and size for all vehicular queueing, stacking, maneuvering, standing and parking to be carried out completely beyond the right of way line. Except for vehicles stopping to enter the highway, the turnout areas and drives within the right of way shall be used only for moving vehicles entering or leaving the highway.

6. Connections with expected daily traffic over 4000 vpd shall be constructed as intersecting side roads. The design requirement of this index and that of the local government will be used to select appropriate connection widths, radii and intersection design, subject to the approval of the Department. For connections with expected daily traffic less than 4000 vpd, the Department will determine if drop curbs or radius returns are required in accordance with existing or planned connections. Where radius returns apply, the design requirements of this index and that of the local government will be used to select appropriate connection widths, radii and intersection design, subject to the approval of the Department.

   For connections that are intended to daily accommodate either multi-unit vehicles or single unit vehicles exceeding 30' in length, returns with 50' radii shall be used, unless otherwise called for in the plans or otherwise stipulated by permit. Where large numbers of multi-unit vehicles will use the connection, the connection width and radii shall be increased and auxiliary lanes, tapers, lane flares, separators and/or islands constructed, as determined by the Department to be necessary for safe turning movements.

7. Any connection requiring or having a specified median opening with left turn storage and served directly by that opening shall have radial returns.

8. Where a connection is intended to align with a connection across the highway, the through lanes shall align directly with the corresponding through lanes.

9. For new connections and for connections on all new construction and reconstruction projects, pavement materials and thicknesses shall meet the requirements applicable to either that detailed for "Urban Flared Turnouts", or, that described in "Table 515-1" for connections with radial returns and/or auxiliary lanes.

10. The responsibility for the cost of construction or alteration to an access connection shall be in accordance with FDOT Rule Chapter 14-96.

DESIGN NOTES

1. Prior to the adoption of FDOT Rules Chapters 14-96 and 14-97, connections to the State Highway System were defined and permitted by Classes. Connections have been redfined by Categories under Rule 14-96; and, the term "Class" has been applied to highway segments of the State Highway System as defined under Rule 14-97.

Footnotes:

All 1/2" joints shall be constructed with preformed joint filler.

* 1/8" Open joints placed at equal (20' max.) intervals for driveways over 20' wide. Joints in curb and gutter to match joints in driveways.

△ When connecting to side road curb and gutter sections, the no drop curb limits should extend back to the side road radius point. With or without curb and gutter, no driveway should encroach on the corner radius.

⟠ Driveways (6" concrete) shall be of a uniform width (W) to the right of way line.

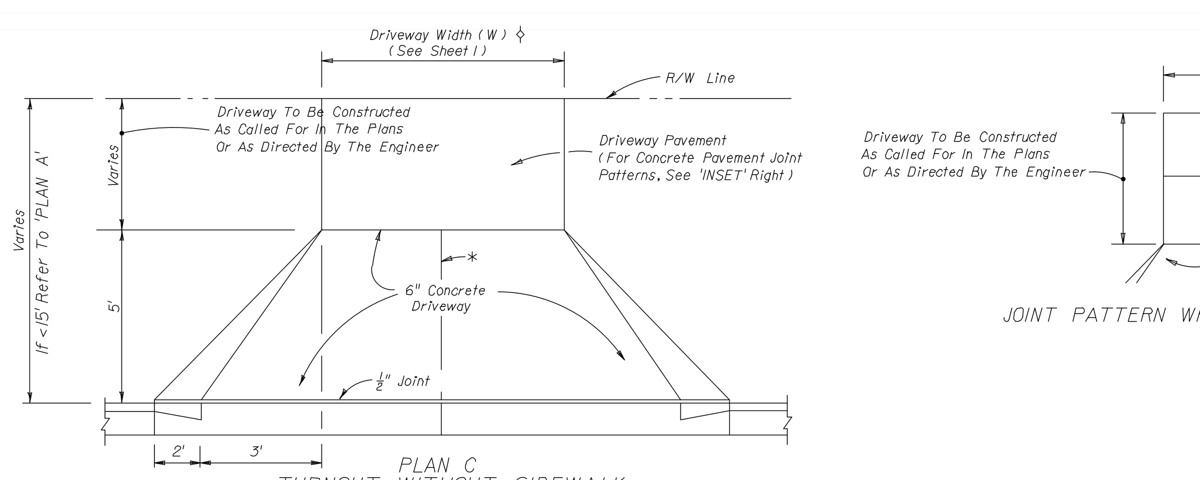

PLAN C
TURNOUT WITHOUT SIDEWALK

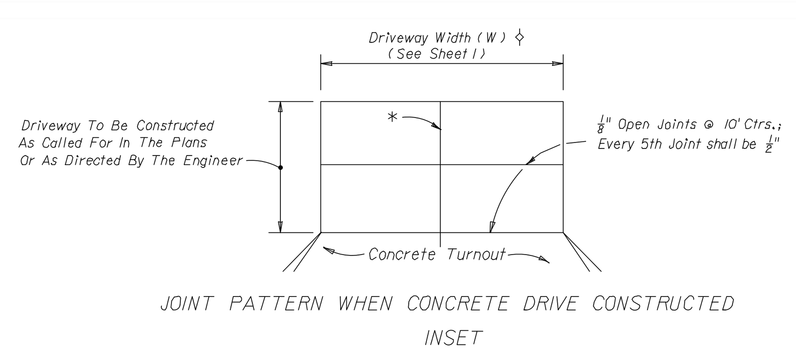

JOINT PATTERN WHEN CONCRETE DRIVE CONSTRUCTED
INSET

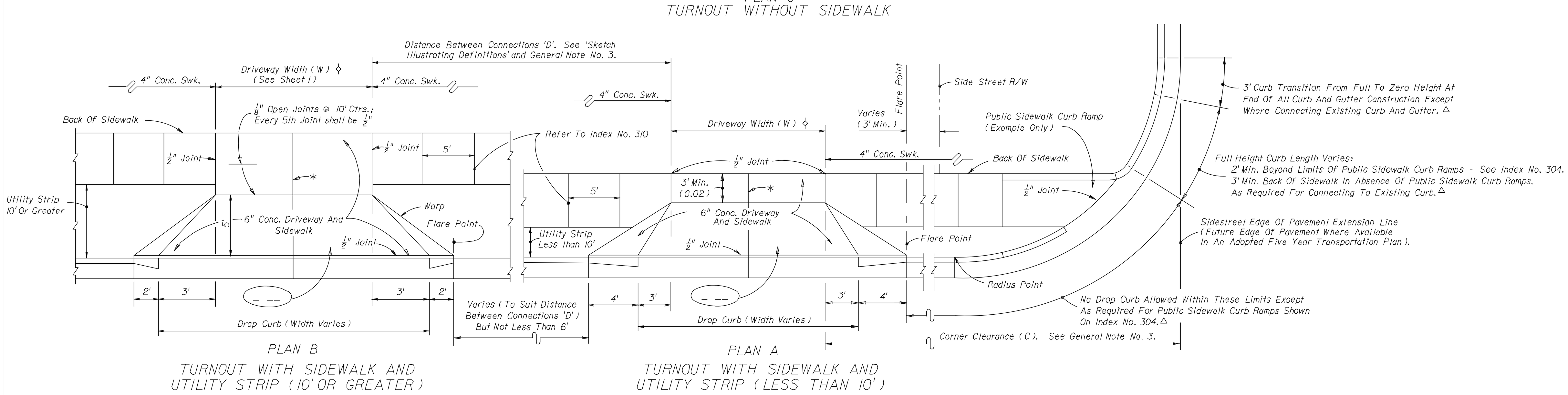

SPECIAL NOTES FOR URBAN FLARED TURNOUTS

1. Drop curb, concrete sidewalks (6" thick) and driveways (6" thick) shall meet Specification Sections 520 and 522. The driveway foundation shall meet the requirements of Subarticle 522-4.

2. For details of drop curb and sidewalk curb ramps refer to Indexes Nos. 300 and 304 respectively.

3. Where turnouts are constructed within existing curb and gutter, the existing curb and gutter shall be removed either to the nearest joint beyond the flare point or to the extent that no remaining section is less than 5' long; and, drop curb constructed in accordance with Notes Nos. 1 and 2.

4. For turnouts with radial returns see the requirements under the "Summary Of Geometric Requirements For Turnouts", the "General Notes", the details of "Rural Turnout Construction" and the detail of "Limits Of Clearing & Grubbing, Stabilization And Base At Intersections".

5. Maintenance of pavement shall extend out to the right of way or 2' beyond the back of sidewalk, whichever distance is less.

6. The maintenance and operation of highway lighting, traffic signals, associated equipment, and other necessary devices shall be the responsibility of a public agency.

7. All pavement markings on the State highways, including acceleration and deceleration lane markings, and signing installed for the operation of the State highway shall be maintained by the Department.

8. All signing and marking installed for the operation of the connection (such as stop bars and stop signs for the connection) shall be the responsibility of the permittee.

9. All sidewalk surfaces crossing driveways with a cross slope shown in this Index to be 0.02 shall be 0.02 Maximum.

TURNOUTS

FDOT 2014 DESIGN STANDARDS	INDEX NO.	SHEET NO.
	515	2 of 7

DESIGN NOTES FOR URBAN FLARED TURNOUTS

1. Driveways indicated as 'Adverse Applications' are those with slopes that can cause overhang drag for representative standard passenger vehicles under fully loaded conditions; or, those with slopes that can cause drivers who are leaving the roadway to slow or pause to the extent that traffic demand volumes will be impeded.

   Driveways indicated as 'Marginal Applications' are those with slopes that can cause overhang drag for representative standard passenger vehicles under fully loaded conditions when the driveway is located on the low side of fully superelevated roadways.

   Driveways indicated as 'General Applications' are those with slopes that can readily accommodate representative standard passenger vehicles and those that can accommodate representative standard trucks, vans, buses and recreational vehicles operating under normal crown and superelevation conditions.

2. The standard flared driveways on this index may not accommodate vehicles with low beds, low undercarriage or low appendage features. Where such vehicles are design vehicles, driveways shall have site specific flare designs or Category III designs.

3. When specific flare type driveways shall be constructed, the type shall be designated in the plans using the assigned alpha-numeric designation.

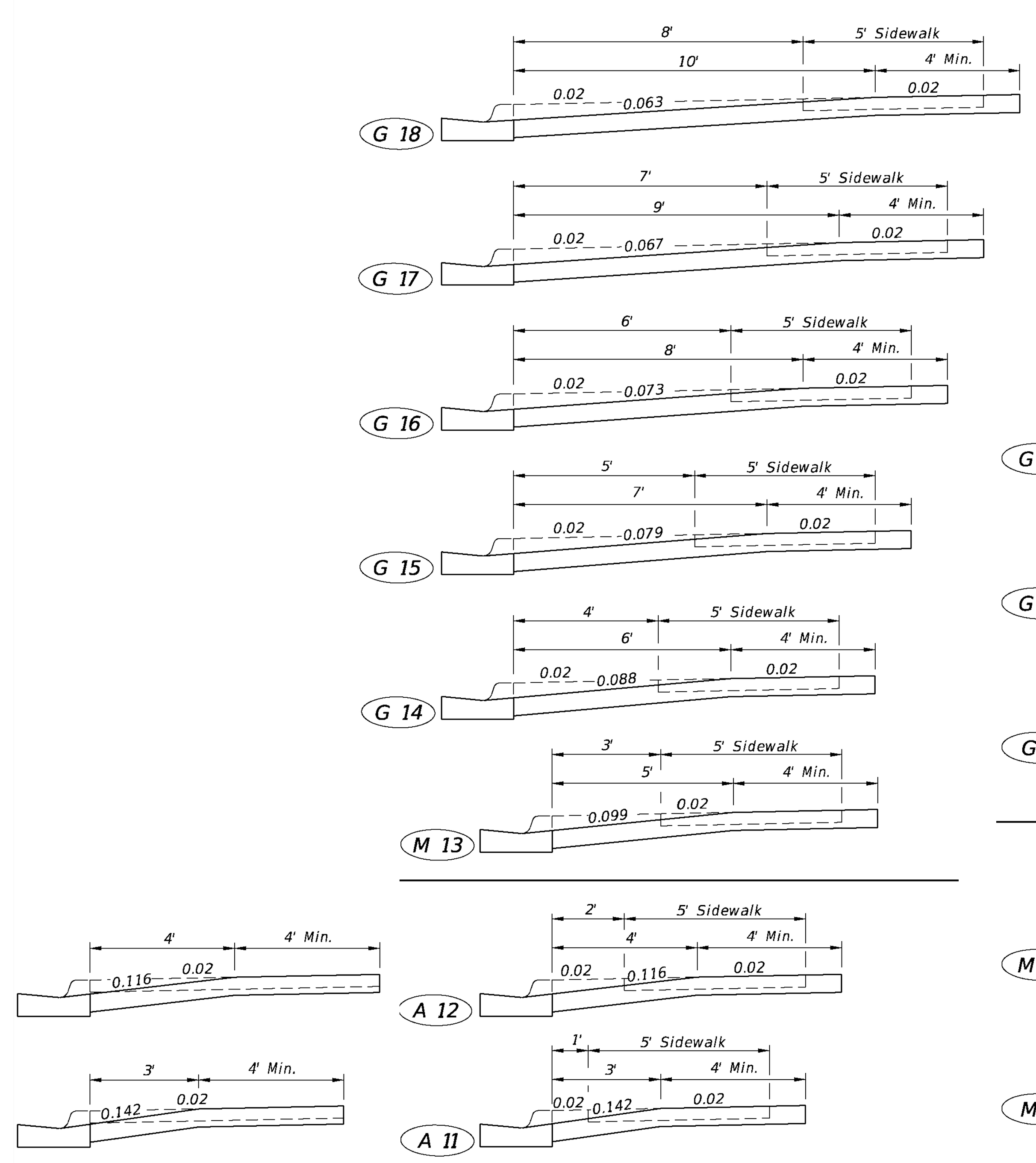

SIDEWALK ADJACENT TO CURB — SIDEWALK WITH UTILITY STRIP ON 0.02 SLOPE

DRIVEWAY SECTIONS ON CURBED FACILITIES WITH SIDEWALKS

TURNOUTS

FDOT 2014 DESIGN STANDARDS	INDEX NO.	SHEET NO.
	515	3 of 7

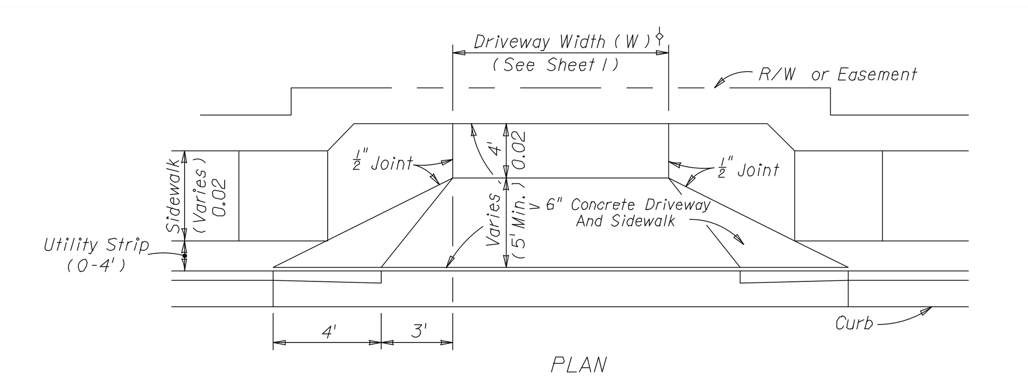

MODIFICATIONS OF 'ADVERSE' AND 'MARGINAL' APPLICATIONS

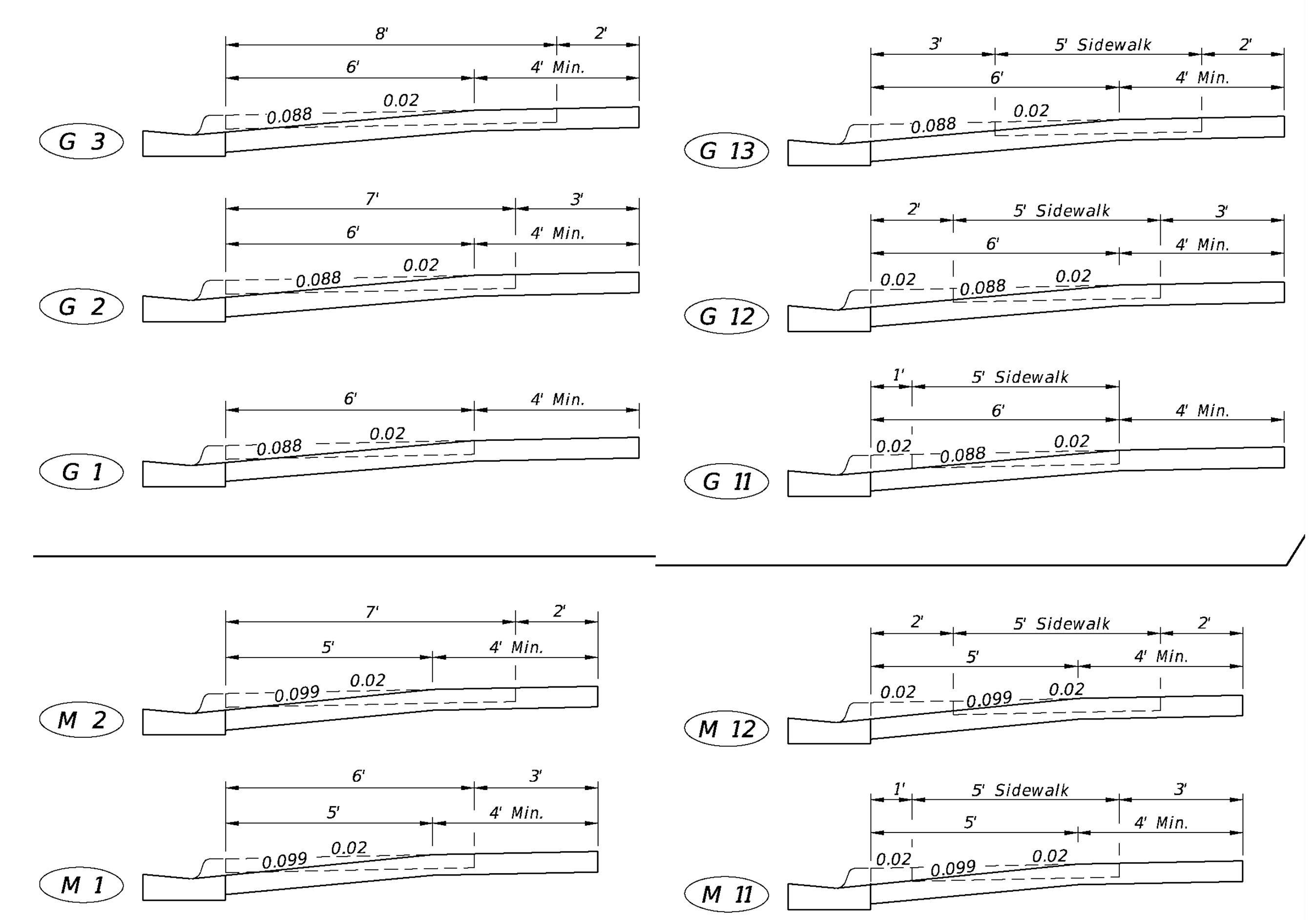

SIDEWALK ADJACENT TO CURB — SIDEWALK WITH UTILITY STRIP ON 0.02 SLOPE

MODIFICATIONS TO ADVERSE AND MARGINAL SECTIONS

TURNOUTS

FDOT 2014 DESIGN STANDARDS	INDEX NO.	SHEET NO.
	515	4 of 7

DATE	REMARK	DR	CH
14-NOV-13	INITIAL SUBMITTAL	MLW	

JOB # 13001

SCALE 1"=NTS

APPROVED BY: NOT VALID WITHOUT ORIGINAL SIGNATURE AND RAISED SEAL
SEAL
SIGNED:
DATE:

2925 KENILWORTH BLVD.,
SEBRING, FLORIDA 33870
863-385-5564 PHONE
863-385-2462 FAX

CERTIFICATE OF AUTHORIZATION # 5684
ROGER DALE POLSTON P. E. # 33222
MARVIN LUTHER WOLFE P.E. # 46030
CLINTON E. HOWERTON JR. P.E. # 61021

Polston Engineering Inc.
CIVIL ENGINEERING CONSULTANTS

LAKE VERONA NORTHWEST BASIN
BEST MANAGEMENT PRACTICES PROJECT
DETAILS

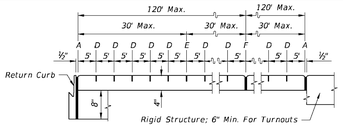

NOTE: "E" Joint(s) Required When Length Exceeds 30'

SAWED JOINTS

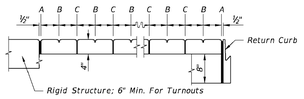

OPEN JOINTS

LONGITUDINAL SECTION
(NOT TO SCALE)

JOINT LEGEND

A–½" Expansion Joints (Preformed Joint Filler)

B–⅛" Dummy Joints, Tooled

C–⅛" Formed Open Joints

D–3/16" Saw Cut Joints, 1½" Deep (within 96 hours) Max. 5' Centers

E–3/16" Saw Cut Joints, 1½" Deep (within 12 hours) Max. 30' Centers

F–½" Expansion Joint When Run Of Sidewalk Exceeds 120'.
Intermediate locations when called for in the plans or at locations as directed by the Engineer.

G–Cold Joint With Bond Breaker, Tooled

SIDEWALK JOINTS

NOTES FOR CONCRETE SIDEWALK ON CURBED ROADWAYS

1. Sidewalks shall be constructed in accordance with Specification Section 522. Sidewalk curb ramps shall include detectable warnings and be constructed in accordance with Index No. 304. Detectable warnings are not required where sidewalks intersect urban flared turnouts.
2. Bond breaker material can be any impermeable coated or sheet membrane or preformed material having a thickness of not less than 6 mils nor more than ½".
3. For turnouts see Index No. 515.
4. Construct sidewalks with 1' thick Edge Beam through the limits of any surface mounted Pedestrian/Bicycle Picket Railing or Pipe Guiderail shown in the plans.

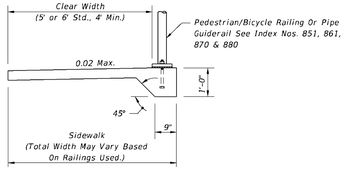

SIDEWALK WITH EDGE BEAM FOR SURFACE MOUNTED RAILINGS

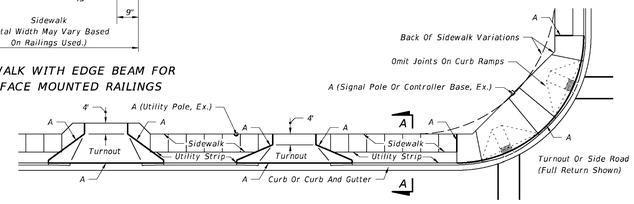

PLAN
SIDEWALK WITH UTILITY STRIP

SECTION AA

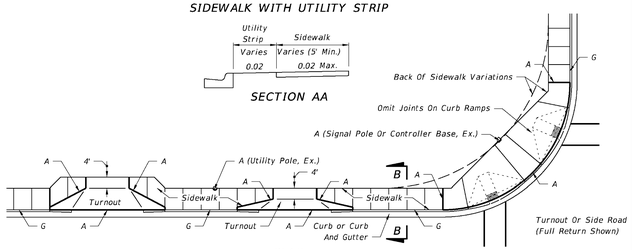

PLAN
SIDEWALK WITHOUT UTILITY STRIP

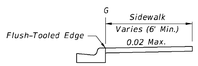

SECTION BB

CONCRETE SIDEWALK

FDOT 2014 DESIGN STANDARDS	INDEX NO. 310	SHEET NO. 1 of 2

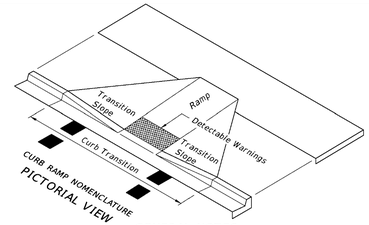

PICTORIAL VIEW

GENERAL NOTES

1. Sidewalk curb ramps shall be constructed at locations that will provide continuous unobstructed pedestrian circulation path to pedestrian areas, elements and facilities within the right of way and to accessible pedestrian routes on adjacent sites. Curbed facilities with sidewalks and those without sidewalks are to have curb ramps constructed for all intersections and turnouts with curbed returns. To accommodate curb ramps, partial curb returns are to extend to the limits prescribed in Index No. 515. Ramps constructed at locations without sidewalks are to have a landing constructed at the top of each ramp, see LANDINGS FOR CURB RAMPS WITHOUT SIDEWALKS.
2. When altering pedestrian facilities, where existing restricted conditions preclude the accommodation of a ramp slope of 1:12, a ramp slope between 1:12 and 1:10 is permitted for a rise of 6" maximum. Where compliance with the requirements for cross slope cannot be fully met, the minimum feasible cross slope shall be provided. Ramp slopes are not required to exceed 15' in length.
3. If sidewalk curb ramps are located where pedestrians must walk across the ramp, then provide transition slopes to the ramp; otherwise a sidewalk curb may be required.
4. All sidewalks, ramps, and landings with a cross slope of 0.02 shown in this Index are 0.02 maximum. All ramp slopes shown in this Index as 1:12 are 1:12 maximum. Landings shall have slopes less than or equal to 0.02 in any direction.
5. Grade breaks at the top and bottom of ramps shall be parallel to each other and perpendicular to the direction of the ramp slope.
6. Where a sidewalk curb ramp is constructed within existing curb, curb and gutter and/or sidewalk, the existing curb or curb and gutter shall be removed to the nearest joint beyond the curb transition or to the extent that no remaining section of curb or curb and gutter is less than 5' long. Existing sidewalks shall be removed to the nearest joint beyond the transition slope or to the extent that no remaining section of sidewalk is less than 5' long. For CONCRETE SIDEWALK details refer to Index 310.
7. Sidewalk curb ramp alpha-identifications are for reference purposes (plans, permits, etc.). Alpha-identifications CR-I and CR-J were intentionally omitted.
8. Detectable warnings shall extend the full width of the ramp and to a depth of 2'. Detectable warnings shall be constructed in accordance with Specification Section 527. For the layout of detectable warnings, refer to the TYPICAL PLACEMENT OF DETECTABLE WARNINGS details. Detectable warnings shall not be provided on transition slopes.
9. When detectable warnings are placed on a slope greater than 5%, domes shall be aligned with the centerline of the ramp; otherwise domes are not required to be aligned.
10. Detectable warnings shall be required on sidewalks at:
    a. Intersecting roads,
    b. Median Crossings greater than or equal to 6' in width,
    c. Railroad Crossings,
    d. Signalized driveways.
11. Detectable Warnings – Acceptance Criteria:
    a. Color and texture shall be complete and uniform.
    b. 90% of individual truncated domes shall be in accordance with the Americans with Disabilities Act Standards for Transportation Facilities, Section 705.
    c. There shall be no more than 4 non-compliant domes in any one square foot.
    d. Non-compliant domes shall not be adjacent to other non-compliant domes.
    e. Surfaces shall not deviate more than 0.10" from a true plane.
12. Detectable warnings shall be installed no greater than 5' from the back of curb or edge of pavement.
13. Detectable warnings shall not be installed over grade breaks.

DETECTABLE WARNINGS AND SIDEWALK CURB RAMPS

FDOT 2014 DESIGN STANDARDS	INDEX NO. 304	SHEET NO. 1 of 7

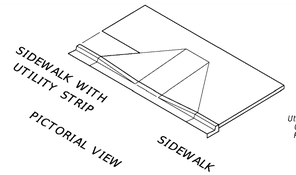

PICTORIAL VIEW

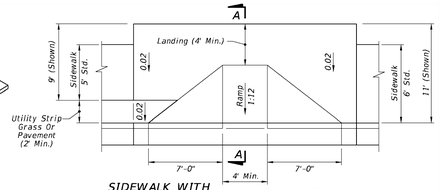

PLAN VIEW

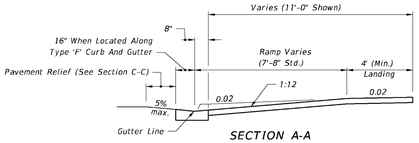

SECTION A-A

SECTION THROUGH RAMP AND LANDING
(UNRESTRICTED CONDITIONS)

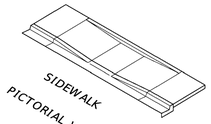

PICTORIAL VIEW

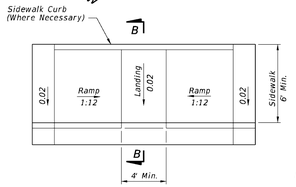

PLAN VIEW

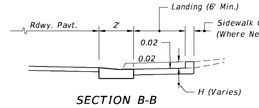

SECTION B-B

Note: For Additional Information On Sidewalk Curb Construction, See SIDEWALK CURB and SIDEWALK CURB OPTIONS details.

SECTION THROUGH LANDING
(UNRESTRICTED CONDITIONS)

SIDEWALK CURB RAMPS WHERE RAMP AND LANDING DEPTHS ARE NOT RESTRICTED

DETECTABLE WARNINGS AND SIDEWALK CURB RAMPS

FDOT 2014 DESIGN STANDARDS	INDEX NO. 304	SHEET NO. 2 of 7

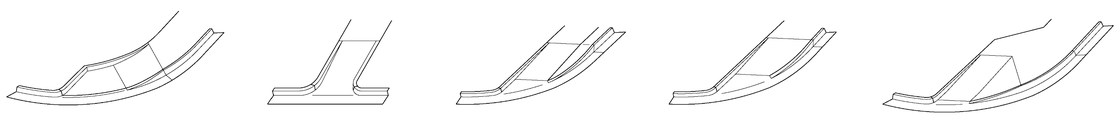

PICTORIAL VIEW (CR-D) | PICTORIAL VIEW (CR-E) | PICTORIAL VIEW (CR-F) | PICTORIAL VIEW (CR-G) | PICTORIAL VIEW (CR-H)

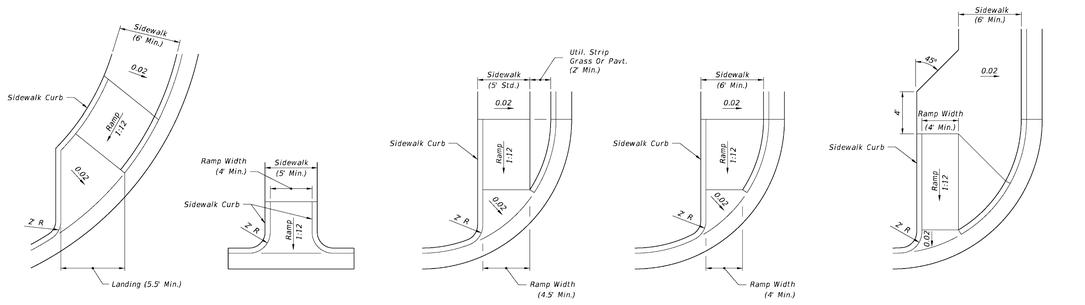

PLAN VIEW (CR-D) | PLAN VIEW (CR-E) | PLAN VIEW (CR-F) | PLAN VIEW (CR-G) | PLAN VIEW (CR-H)

DIMENSIONAL FEATURES OF SIDEWALK CURB RAMPS FOR LINEAR PEDESTRIAN TRAFFIC

LAST REVISION 07/01/13	REVISION	DESCRIPTION:	FDOT 2014 DESIGN STANDARDS	DETECTABLE WARNINGS AND SIDEWALK CURB RAMPS	INDEX NO. 304	SHEET NO. 3 of 7

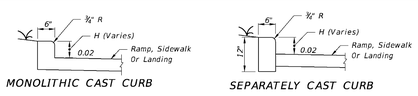

MONOLITHIC CAST CURB | SEPARATELY CAST CURB

SIDEWALK CURB OPTIONS

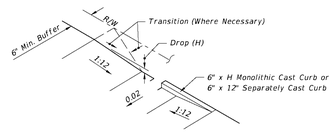

Construct Sidewalk Curb In Cut Sections.

SIDEWALK CURB

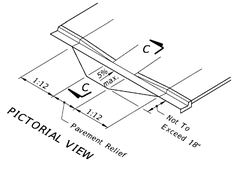

PICTORIAL VIEW

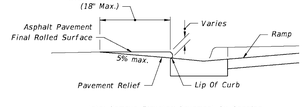

Note: Remove Elevated Pavement By Spading And Rolling; Smooth Milling; or Grinding

SECTION C-C

PAVEMENT RELIEF AT LIP OF CURB

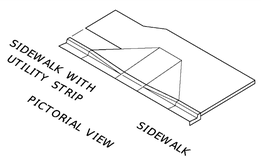

PICTORIAL VIEW

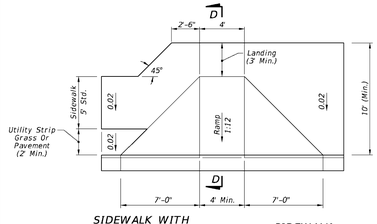

SIDEWALK WITH UTILITY STRIP | SIDEWALK

PLAN VIEW

CR-K

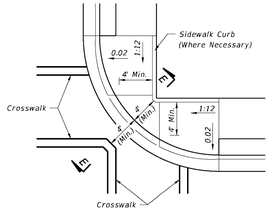

PLAN VIEW

CR-L

Note: Crosswalk Width and Configuration Vary; Must Conform to Index No. 17344 and 17346.

15' Radius Curve Shown for CR-L.

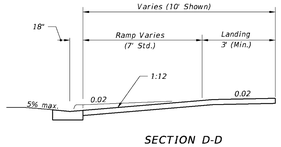

SECTION D-D

SECTION THROUGH RAMP AND LANDING
(RESTRICTED CONDITIONS)

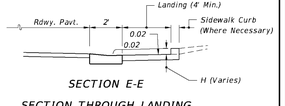

SECTION E-E

SECTION THROUGH LANDING
(RESTRICTED CONDITIONS)

SIDEWALK CURB RAMPS WHERE RAMP AND LANDING DEPTHS ARE RESTRICTED

LAST REVISION 07/01/13	REVISION	DESCRIPTION:	FDOT 2014 DESIGN STANDARDS	DETECTABLE WARNINGS AND SIDEWALK CURB RAMPS	INDEX NO. 304	SHEET NO. 4 of 7

DATE	REMARK	DR	CH
14-NOV-13	INITIAL SUBMITTAL	MLW	

JOB # 13001

SCALE 1"=NTS

APPROVED BY: NOT FOR CONSTRUCTION UNLESS SIGNED AND SEALED

SEAL

SIGNED:

DATE:

2925 KENILWORTH BLVD.,
SEBRING, FLORIDA 33870
863-385-2552 PHONE
863-385-2462 FAX

CERTIFICATE OF AUTHORIZATION # 5584
KURT E. POLSTON, P.E. # 43227
MARVIN LUTHER WOLFE P.E. # 46030
CLINTON E. HOWERTON JR. P.E. # 61021

Polston Engineering Inc.
CIVIL ENGINEERING CONSULTANTS

LAKE VERONA NORTHWEST BASIN
BEST MANAGEMENT PRACTICES PROJECT
DETAILS

SHEET 12 OF 14

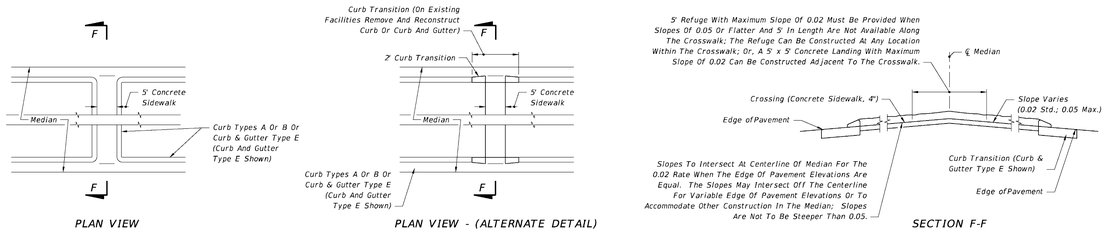

MEDIAN CROSSING

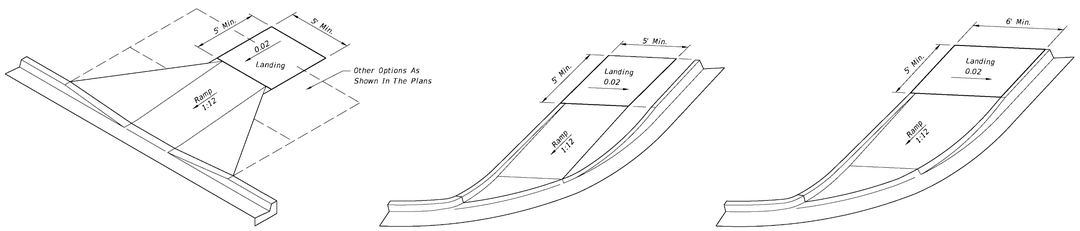

LANDINGS FOR CURB RAMPS WITHOUT SIDEWALKS

LAST REVISION	REVISION	DESCRIPTION:			INDEX NO.	SHEET NO.
07/01/13			FDOT 2014 DESIGN STANDARDS	DETECTABLE WARNINGS AND SIDEWALK CURB RAMPS	304	5 of 7

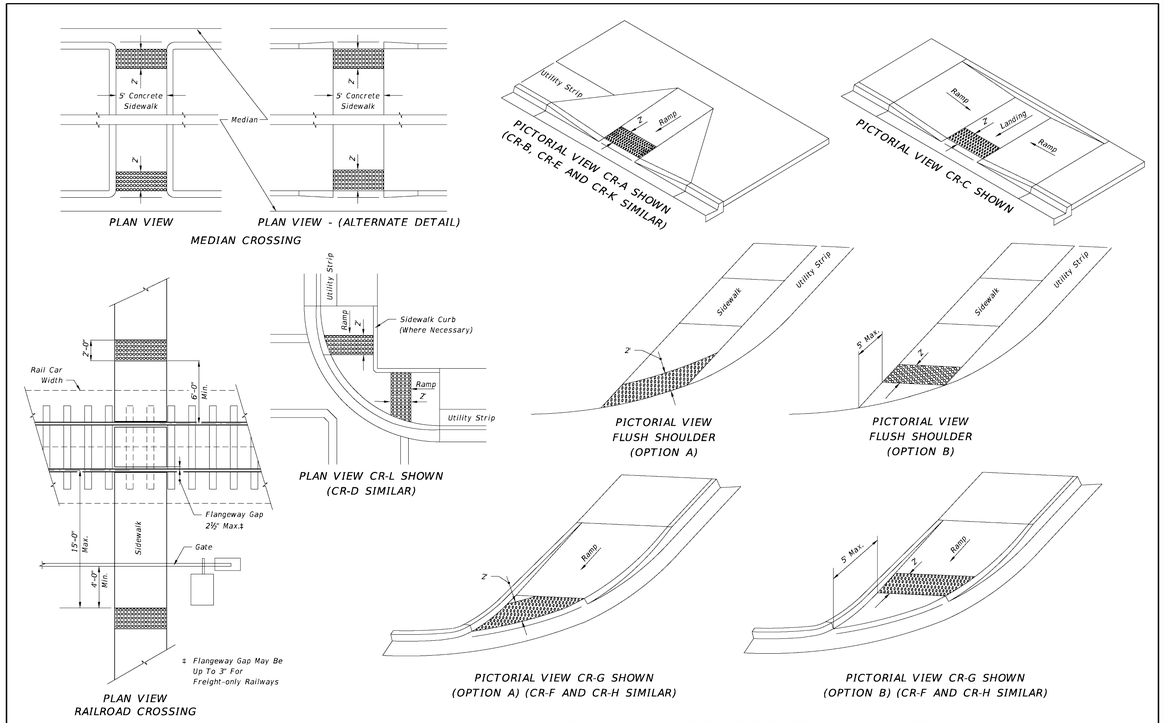

TYPICAL PLACEMENT OF DETECTABLE WARNINGS

LAST REVISION	REVISION	DESCRIPTION:			INDEX NO.	SHEET NO.
07/01/13			FDOT 2014 DESIGN STANDARDS	DETECTABLE WARNINGS AND SIDEWALK CURB RAMPS	304	6 of 7

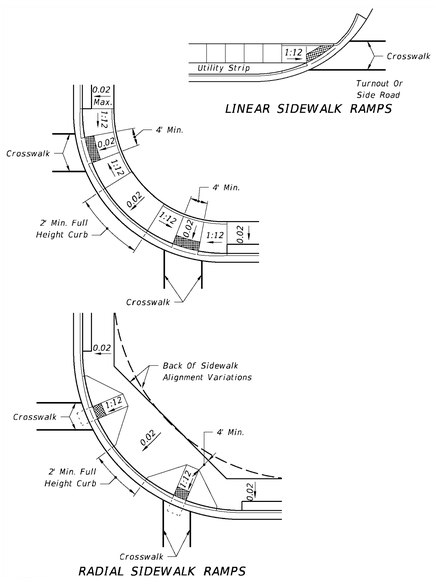

RADIAL SIDEWALK RAMPS

NOTES:

1. Where crosswalk markings are used, ramps shall fall within the crosswalk limits. A clear space of 48" minimum is required at the bottom of the ramp within a marked crosswalk. If crosswalk markings are not present, a clear space of 48" minimum is required at the bottom of the ramp outside of active travel lanes.
2. Crosswalk widths and configurations vary; must conform to Index No. 17344 and 17346.

TABLE OF DETECTABLE WARNINGS

CURB RAMP TYPE	CURB RADIUS (FT)	TOTAL AREA (SF)
CR-A	N/A	8
CR-B	N/A	8
CR-C	N/A	8
CR-D	25	11
CR-E	N/A	8
CR-F	10	9
	20	11
	25	13
	30	14
CR-G	10	10
	20	11
	25	12
	30	14
CR-H	20	8
	25	8
	30	8
CR-K	N/A	8
CR-L	10	18
	15	13
FLUSH SHOULDER		
OPTION A	10	11
	20	14
	25	15
	30	17
	40	19
	50	21
OPTION B	10	10
	20	10
	25	10

Note:
Due to construction applications, CR-L is the only curb ramp for which a detectable warning quantity was calculated using a curb radius of 15'.

For flush shoulder options with 5' sidewalks, the back of sidewalk is measured at 10' from the edge of traveled way.

TYPICAL PLACEMENT OF SIDEWALK CURB RAMPS AT CURBED RETURNS

DETECTABLE WARNINGS AND SIDEWALK CURB RAMPS

FDOT 2014 DESIGN STANDARDS	INDEX NO. 304	SHEET NO. 7 of 7

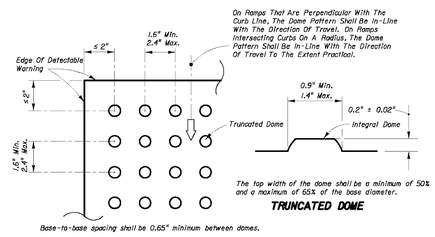

PLAN VIEW

All Sidewalk Curb Ramps Shall Have Detectable Warning Surfaces That Extend The Full Width Of The Ramp And In The Direction Of Travel 24 Inches (610 mm) From The Back Of Curb.

CURB RAMP DETECTABLE WARNING DETAIL

Last Revision	Sheet No.
07/01/05	6 of 6
Index No. 304	

2006 FDOT Design Standards

PUBLIC SIDEWALK CURB RAMPS

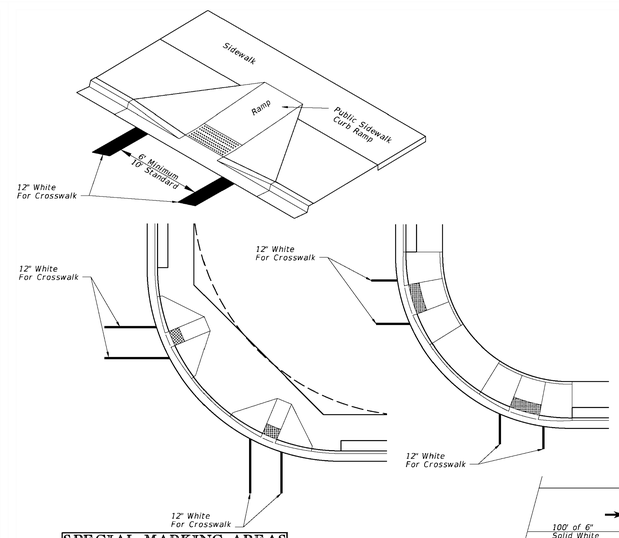

SPECIAL MARKING AREAS

FDOT 2014 DESIGN STANDARDS	INDEX NO. 17346	SHEET NO. 3 of 14

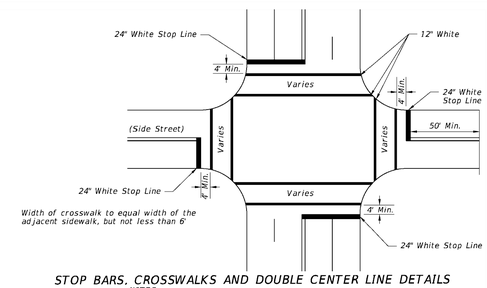

STOP BARS, CROSSWALKS AND DOUBLE CENTER LINE DETAILS

NOTES:

1. When public sidewalk curb ramps are present, refer Index No. 17344 and Index No. 304 for crosswalk widths.
2. Double yellow longitudinal center lines on all roadway approaches shall be extended back 100' for projects involving intersection improvements only.
3. When specified, "stop" message shall be placed 25' back of stop lines.

SPECIAL MARKING AREAS

FDOT 2014 DESIGN STANDARDS	INDEX NO. 17346	SHEET NO. 4 of 14

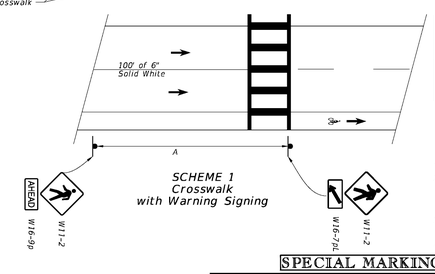

APPROACH SPEED MPH	A-SUGGESTED DISTANCE (Ft.)
25 Or Less	200
26 To 35	250
36 To 45	300

1. Plans shall indicate which crosswalk scheme is to be used.
2. The details shown do not depict the signing and markings for multi-lane roadways with divided medians. For these applications, additional signs shall be installed on the median side. Minimum width of Mid-Block Crosswalks is 10'.
3. All mid-block crosswalks shall use special emphasis crosswalk markings.
4. Crosswalk marking should utilize preformed marking materials.

SPECIAL MARKING AREAS

FDOT 2014 DESIGN STANDARDS	INDEX NO. 17346	SHEET NO. 10 of 14

DATE	REMARK	DR	CH
14-NOV-13	INITIAL SUBMITTAL	MLW	

JOB # 13001

SCALE 1"=NTS

APPROVED BY:
NOT VALID WITHOUT ORIGINAL SIGNATURE AND ORIGINAL SEAL

SEAL

SIGNED:

DATE:

2925 KENILWORTH BLVD.,
SEBRING, FLORIDA 33870
863-385-2462 PHONE
863-385-2462 FAX

CERTIFICATE OF AUTHORIZATION # 6564
EUGENE E. POLSTON, P.E. # 33227
MARVIN LUTHER WOLFE P.E. # 46030
CLINTON E. HOWERTON JR. P.E. # 61021

Polston Engineering Inc.
CIVIL ENGINEERING CONSULTANTS

LAKE VERONA NORTHWEST BASIN
BEST MANAGEMENT PRACTICES PROJECT
DETAILS

SHEET 13 OF 14

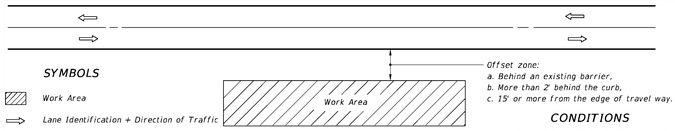

SYMBOLS

- Work Area
- Lane Identification + Direction of Traffic

CONDITIONS

WHERE ANY VEHICLE, EQUIPMENT, WORKERS AND THEIR ACTIVITIES ARE BEHIND AN EXISTING BARRIER, MORE THAN 2' BEHIND THE CURB, OR 15' OR MORE FROM THE EDGE OF TRAVEL WAY.

TWO-LANE, TWO-WAY, WORK OUTSIDE SHOULDER

FDOT 2014 DESIGN STANDARDS	INDEX NO.	SHEET NO.
	601	1 of 1

GENERAL NOTES

1. If the work operation (excluding establishing and terminating the work area) requires that two or more work vehicles cross the offset zone in any one hour, traffic control will be in conformance with Index No. 602.
2. No special signing is required.
3. When a side road intersects the highway within the work area, additional TTC devices shall be placed in accordance with other applicable TCZ Indexes.
4. When construction activities encroach on a sidewalk refer to Index No. 660.
5. For general TCZ requirements and additional information, refer to Index No. 600.

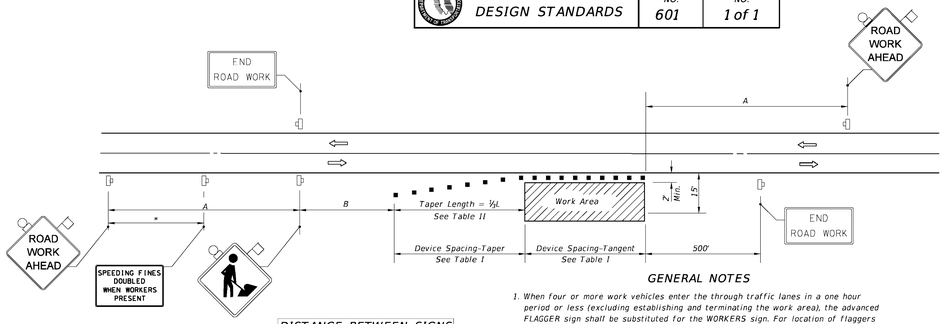

Table II
Taper Length - Shoulder

Speed (mph)	⅓L (ft) 8' Shldr.	10' Shldr.	12' Shldr.	Notes
25	28	35	42	$L=\frac{WS^2}{60}$
30	40	50	60	
35	55	68	82	
40	72	90	107	
45	120	150	180	L=WS
50	133	167	200	
55	147	183	220	
60	160	200	240	
65	173	217	260	
70	187	233	280	

8' minimum shoulder width

⅓L = Length of shoulder taper in feet

W = Width of total shoulder in feet (combined paved and unpaved width)

S = Posted speed limit (mph)

DISTANCE BETWEEN SIGNS

Speed	Spacing (ft.) A	B
40 mph or less	200	200
45 mph	350	350
50 mph or greater	500	500

*Midway between signs.

SYMBOLS

- Work Area
- Sign With 18" x 18" (Min.) Orange Flag And Type B Light
- Channelizing Device (See Index No. 600)
- Work Zone Sign
- Lane Identification + Direction of Traffic

GENERAL NOTES

1. When four or more work vehicles enter the through traffic lanes in a one hour period or less (excluding establishing and terminating the work area), the advanced FLAGGER sign shall be substituted for the WORKERS sign. For location of flaggers and FLAGGER signs, see Index No. 603.
2. SHOULDER WORK sign may be used as an alternate to the WORKER symbol sign only on the side where the shoulder work is being performed.
3. When a side road intersects the highway within the TTC zone, additional TTC devices shall be placed in accordance with other applicable TCZ Indexes.
4. For general TCZ requirements and additional information, refer to Index No. 600.

DURATION NOTES

1. Signs and channelizing devices may be omitted if all of the following conditions are met:
   a. Work operations are 60 minutes or less.
   b. Vehicles in the work area have high-intensity, rotating, flashing, oscillating, or strobe lights operating.

CONDITIONS

WHERE ANY VEHICLE, EQUIPMENT, WORKERS OR THEIR ACTIVITIES ENCROACH THE AREA CLOSER THAN 15' BUT NOT CLOSER THAN 2' TO THE EDGE OF TRAVEL WAY.

Table I
Device Spacing

Speed (mph)	Max. Distance Between Devices (ft.): Cones or Tubular Markers: Taper	Tangent	Type I or Type II Barricades or Vertical Panels or Drums: Taper	Tangent
25	25	50	25	50
30 to 45	25	50	30	50
50 to 70	25	50	50	100

TWO-LANE, TWO-WAY, WORK ON SHOULDER

FDOT 2014 DESIGN STANDARDS	INDEX NO.	SHEET NO.
	602	1 of 1

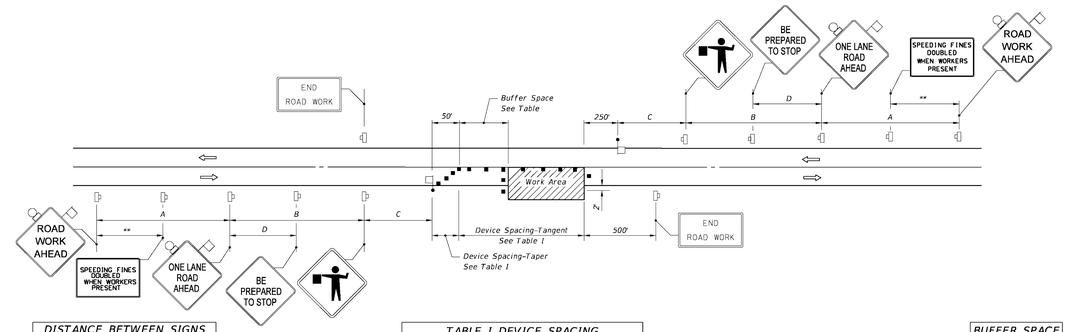

DISTANCE BETWEEN SIGNS

Speed (mph)	Spacing (ft.) A	B	C	D
40 or less	200	200	200	100
45	350	350	350	175
50	500	500	500	250
55 or greater	2640	1640	1000	500

* The ROAD WORK 1 MILE sign may be used as an alternate to the ROAD WORK AHEAD sign.

** 500' beyond the ROAD WORK AHEAD sign or midway between signs whichever is less.

*** BE PREPARED TO STOP sign may be omitted for speeds of 45 MPH or less.

TABLE I DEVICE SPACING

Speed (mph)	Max. Distance Between Devices (ft.): Cones or Tubular Markers: Taper	Tangent	Type I or Type II Barricades or Vertical Panels or Drums: Taper	Tangent
25 to 45	20	50	20	50
50 to 70	20	50	20	100

GENERAL NOTES

1. Work operations shall be confined to one traffic lane, leaving the opposite lane open to traffic.
2. Additional one-way control may be effected by the following means:
   1. Flag-carrying vehicle;
   2. Official vehicle;
   3. Pilot vehicles;
   4. Traffic signals.

   When flaggers are the sole means of one-way control, the flaggers shall be in sight of each other or in direct communication at all times.
3. The ONE-LANE ROAD signs are to be fully covered and the FLAGGER signs either removed or fully covered when no work is being performed and the highway is open to two-way traffic.
4. When a side road intersects the highway within the TTC zone, additional TTC devices shall be placed in accordance with other applicable TCZ Indexes.
5. The two channelizing devices directly in front of the work area and the one channelizing device directly at the end of the work area may be omitted provided vehicles in the work area have high-intensity rotating, flashing, oscillating, or strobe lights operating.
6. For general TCZ requirements and additional information, refer to Index No. 600.

DURATION NOTES

1. ROAD WORK AHEAD and the BE PREPARED TO STOP signs may be omitted if all of the following conditions are met:
   a. Work operations are 60 minutes or less.
   b. Speed limit is 45 mph or less.
   c. No sight obstructions to vehicles approaching the work area for a distance equal to the buffer space.
   d. Vehicles in the work area have high-intensity, rotating, flashing, oscillating, or strobe lights operating.
   e. Volume and complexity of the roadway has been considered.

BUFFER SPACE

Speed (mph)	Dist. (ft.)
25	155
30	200
35	250
40	305
45	360
50	425
55	495
60	570
65	645
70	730

When Buffer Space cannot be attained due to geometric constraints, the greatest attainable length shall be used, but not less than 200 ft.

SYMBOLS

- Work Area
- Sign With 18" x 18" (Min.) Orange Flag And Type B Light
- Channelizing Device (See Index No. 600)
- Work Zone Sign
- Flagger
- Automated Flagger Assistance Devices (AFAD), With Gate
- Lane Identification + Direction of Traffic

CONDITIONS

WHERE ANY VEHICLE, EQUIPMENT, WORKERS OR THEIR ACTIVITIES ENCROACH THE AREA BETWEEN THE CENTERLINE AND A LINE 2' OUTSIDE THE EDGE OF TRAVEL WAY.

LAST REVISION	REVISION	DESCRIPTION:	FDOT 2014 DESIGN STANDARDS	TWO-LANE, TWO-WAY, WORK WITHIN THE TRAVEL WAY	INDEX NO.	SHEET NO.
07/01/09					603	1 of 2

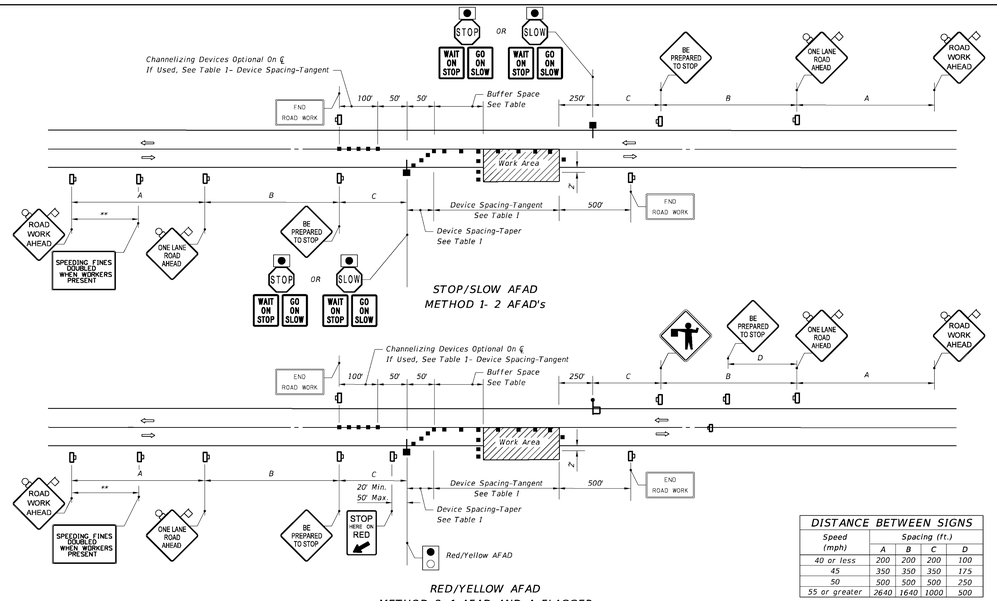

DISTANCE BETWEEN SIGNS

Speed (mph)	Spacing (ft.) A	B	C	D
40 or less	200	200	200	100
45	350	350	350	175
50	500	500	500	250
55 or greater	2640	1640	1000	500

* (See Sheet 1 Notes)
** (See Sheet 1 Notes)

AUTOMATED FLAGGER ASSISTANCE DEVICES (AFAD) NOTES

1. AFAD's shall only be used in situations where there is only one lane of approaching traffic in the direction to be controlled.
2. When used at nighttime, the AFAD flagging station shall be illuminated.
3. When the AFAD is not in use, it shall be moved outside the clear zone or be shielded by a barrier or crash cushion and the signs associated with the AFAD shall be removed or covered.
4. Duration Notes shown on sheet 1 of 2 do not apply when AFAD are used.
5. Only qualified flaggers who have been trained in the operation of the AFAD may operate the AFAD. When in use, each AFAD must be in view of and attended at all times by the flagger operating the device. Use two flaggers and one of the following methods in the deployment of AFAD:
   Method 1: Place an AFAD at each end of the temporary traffic control zone.
   Method 2: Place an AFAD at one end of the temporary traffic control zone and a flagger at the opposite end.

   A single flagger may simultaneously operate two AFAD (Method 1) or may operate a single AFAD on one end of the temporary traffic control zone while being the flagger at the opposite end of the temporary traffic control zone (Method 2) if all four of the following conditions are present:
   a. The flagger has an unobstructed view of the AFAD(s);
   b. The flagger has an unobstructed view of approaching traffic in both directions; and
   c. For Method 1, the AFAD's are less than 800 ft apart. For Method 2, the AFAD and the flagger are less than 800 ft apart.
   d. Ensure two trained flaggers are available on-site to provide normal flagging operations should an AFAD malfunction.

LAST REVISION	REVISION	DESCRIPTION:	FDOT 2014 DESIGN STANDARDS	TWO-LANE, TWO-WAY, WORK WITHIN THE TRAVEL WAY	INDEX NO.	SHEET NO.
07/01/10					603	2 of 2

BASIN	AREA ACRES	AREA VOLUME (SF)	DITCH VOLUME (CY)	DITCH RETENTION DEPTH (CF)	RETENTION DEPTH (IN)	REQUIRED AREA (IN)	SOD (SY)
4	5	10140	305	5209	0.287	0.191	2015
5	5	10690	315	4434	0.244	0.191	2000
6	5	9335	280	4186	0.231	0.191	1715
7+11+15+19	3.7			2740	0.204	0.191	200
8	5	14400	445	7388	0.407	0.191	2455
9	5	10710	345	5332	0.294	0.191	1935
10	5	10345	320	5102	0.281	0.191	1860
12	5	9455	360	3220	0.177	0.191	1605
13	5	9910	275	4601	0.253	0.191	1565
14+18	2.5			1970	0.217	0.191	1000
16	5	9735	230	3064	0.169	0.191	1775
17	4.5	5155	130	1905	0.117	0.191	860
20	2	1870	45	797	0.110	0.191	290
21	1.17						
TOTALS	58.87	101745	3005	49948	0.234	0.191	19275

	ITEM #	ROADWAY ITEM	UNIT	QUANTITY	UNIT COST	COST
1	100-99	Construction (Surveying) Layout & Record Drawings	LS	1		
2	101-1	Mobilization	LS	1		
3	102-1	Maintenance of Traffic	LS	1		
4	104-12-A	Erosion Control (Staked Turbidity Barrier)	LF	1320		
5	110-1-1	Tree removal	LS	1		
6	110-1-1	Remove Concrete Sidewalk 4" thick - 5' wide	FT	3225		
7	110-4	Remove Concrete Driveway to 6" thick	EA	12		
8	120-1	Grade Swale and Remove Excess Material (Sod not included)	CY	3050		
9	520-1-2	Sod and Restoration	SY	19275		
10	520-1-10	Remove and Replace Concrete Curb and Gutter (Type "F")	LF	645		
11	520-2-4	Concrete Curb (Type "D")	LF	1450		
12	520-3	Concrete Curb (Valley Curb)	LF	8130		
13	522-1	Concrete Flume Construction 3' by 4', 6" thick	EA	72		
14	522-1	Concrete Flume Construction 4' by 5', 6" thick	EA	48		
15	522-1	Sidewalk Concrete Flume Construction	EA	4		
15	522-1	Concrete Sidewalk (4" thick - 8' wide)	LF	3225		
16	522-2	Concrete Driveway/Sidewalk Construction, (6" thick)	EA	12		
17	425-1521	Type "C" Inlet, Ditch Bottom	EA	2		
18	425-1551	Type "E" Inlet, Ditch Bottom	EA	2		
19	527-2	Detectable Warning Stipe of ADA Road Crossings	EA	12		
20	430-174-101	18" Culvert (RCP)	LF	190		
21	430-984-125	18" Side Drain, Mitered End Section	EA	1		
22	430-860	Plugging 18" culvert - Place out of Service	EA	2		
23	711-11-123	Crosswalk, 12" Solid Traffic Stripe, Thermoplastic White	LF	295		
24	711-11-125	Stop bar, 24" Solid Traffic Stripe, Thermoplastic White	LF	50		
25		RainTank (HD) retention system	CF	5280		
26		Bond & Insurance	LS	1		
27		Testing and Lab Work	LS	1		
					TOTAL	

DATE	REMARK	DR	CH
14-NOV-13	INITIAL SUBMITTAL	MLW	

JOB # 13001

SCALE 1"=NTS

APPROVED BY: NOT VALID WITHOUT ORIGINAL SIGNATURE AND ORIGINAL SEAL

SEAL

SIGNED:

DATE:

2925 KENILWORTH BLVD.,
SEBRING, FLORIDA 33870
863-385-2462 OFFICE
863-385-2462 FAX

CERTIFICATE OF AUTHORIZATION # 5584
REGISTERED PROFESSIONAL ENGINEERS
MARVIN LUTHER WOLFE P.E. # 46030
CLINTON E. HOWERTON JR. P.E. # 61021

Polston Engineering Inc.
CIVIL ENGINEERING CONSULTANTS

LAKE VERONA NORTHWEST BASIN
BEST MANAGEMENT PRACTICES PROJECT
MAINTENANCE OF TRAFFIC AND QUANTITIES

SHEET 14 OF 14